Relationship between mold geometry, processing conditions and mechanical properties : computer integrated injection molding application

Salloum, G.; Laguë, G.; Garcia-Rejon, A.

Publisher's version / Version de l'éditeur:

Report (Industrial Materials Research Institute (Canada)); no. IGM86-107-447, 1986

IGM86-107-447
CNRC 26263

Relationship Between Mold Geometry, Processing Conditions and Mechanical Properties: Computer Integrated Injection Molding Application

by

G. Salloum, G. Laguë, A. Garcia-Rejon

National Research Council Canada
Industrial Materials Research Institute
75 De Mortagne Blvd.
Boucherville, Québec, J4B 6Y4 Canada

ABSTRACT

The injection molding of thermoplastics involves a large number of variables which are related to part and mold design, machine operation and resin properties. Important aspects such as the feeding system (sprue, runner and gate) and processing conditions govern the flow characteristics and heat transfer phenomena occuring during the filling and solidification phases, which in turn affect the mechanical properties of the finished products.

This paper will describe, within the framework of computer integrated injection molding, the results of a research project regarding the relationship between the above mentioned aspects. Experimental as well as process simulation results on a variety of samples (HDPE, PP) will be presented.

IGM 86-107-447
CNRC 26263

RELATIONSHIP BETWEEN MOULD GEOMETRY, PROCESSING CONDITIONS AND MECHANICAL PROPERTIES: COMPUTER INTEGRATED INJECTION MOULDING APPLICATION

BY

G. SALLOUM, G. LAGUÉ, A. GARCIA-REJON

National Research Council of Canada
Industrial Materials Research Institute
75 De Mortagne Blvd
Boucherville, Québec J4B 6Y4 Canada

INTRODUCTION

The injection moulding of thermoplastics involves a large number of variables which are related to part and mould design, machine operation and resin properties. Important aspects such as the feeding system (sprue, runner and gate) and processing conditions govern the flow characteristics and heat transfer phenomena occurring during the filling and solidification phases, which in turn affect the mechanical properties of the finished products.

Several authors have examined the effect of moulding conditions (1-5) as well as mould design (6-10) on the structural and mechanical properties of injection moulded samples. Some of these findings have been used to establish mathematical models of product performance based mainly on processing conditions and resin characteristics.

The results of investigations of this kind become more important in the light of the rapid development of Computer Integrated Injection Moulding (CIIM) (11) technology.

In order to integrate the different components of this system (Figure 1) it is desirable to establish theoretical and/or experimental relationships among them. For example, the knowledge of the flow characteristics in runners and gates of different types and dimensions can be used to establish mould design guidelines (flow simulation - tooling design link) and to predict final part properties such as tensile modulus and shrinkage (flow simulation and stress analysis of the part relation).

In the long run this approach will enable the CIIM technology to be a fully predictive tool capable of describing the behaviour of the material in the different stages of the process - from part conception to final product performance.

This paper will describe some preliminary results (experimental as well as theoretical) concerned with the relationship between process conditions and mould design on one hand and the mechanical properties of the moulded part on the other.

EXPERIMENTAL PROGRAM

Material

Polypropylene (ProfaX 6331: $\rho = 0.902$ g/cm^3, MI = 12 g/10 min (ASTM D 1238 condition I) was used throughout this study.

Injection Moulding Equipment

A mould having two identical cavities in the shape of tensile test specimens (ASTM D638) was used (Figure 2). By using movable plugs in the runners, the way the flow enters each cavity can be controlled. The specimens can be moulded from both ends simultaneously thus forming a weldline at its center or from one end alone so that no weldline will be formed. The mould is also equipped with a set of interchangeable gates (edge and fan of different dimensions) and is instrumented in such a way that pressure measurements can be taken both in the cavity and in the runner system.

The mould was mounted on a 70 ton injection press (Engel ES 150/70) with closed loop control for speed and pressure as well as adaptive shot size control.

Experimental Procedure

Four processing parameters - melt and mould temperature, injection/holding pressures and cooling time - were varied one at a time while all the others remained constant (Table 1). Two different fan gates, one edge and one pin-point gate were used in this study. Most of the tests were caried out on samples without a weldline.

The mechanical properties of the samples were measured using an Instron Tensile Testing Machine (Model 1125). The test temperature was ambient and the test conditions correspond to the norm ASTM D638. A testing speed of 5 mm/min was used. The strain was measured by an electrical extensometer.

RESULTS AND DISCUSSION

The gate of an injection mould serves several purposes. It freezes rapidly and prevents material either entering or leaving the mould; it provides a small region in which the melt is under the effect of high shear rates; and it provides an easy means to separate the feeding system from the moulding.

The two purposes mentioned first to a certain extent control the thermomechanical history of the melt entering the cavity and consequently should be considered among the parameters determining the final properties of the moulded part. Furthermore the geometrical characteristics of the gate and its position affect in different forms the flow through them as well as the flow pattern in the cavity.

Figure 3 shows the shear rate patterns calculated for gates used in this study. Gates # 1 and # 2 (fan) exhibit similar values with shear rate decreasing towards the entrance of the cavity. Gate # 4 (edge) presents a higher shear rate

value at the entrance of the cavity which remains almost constant throughout the gate. Gate # 3 (edge) having the smallest area shows the highest shear rate at the exit.

Figre 4 presents the relation between injection pressure and tensile modulus of the samples moulded using different gates. Although the change, in stiffness is not very large (small cavity under normal operating conditions), it can be seen that the modulus decreases with increasing injection pressure. This decrease is more significant in the case of gate # 4. Probably this could be attributed to a low degree of orientation of the melt entering the mould. The opposite is true in the case of gate # 3 where the high shear rate causes a larger orientation and consequently a higher modulus. The larger difference in modulus at higher injection pressure among the gates could also be caused by a more uniform packing, and therefore absence of a preferred orientation in the gates with large areas.

Figure 5 shows a comparison of moduli of samples moulded with higher melt and mould temperatures.

It is found that the samples sheared the most at the gate exhibit the highest modulus values.

The modulus decreases as the melt temperature increases probably due to a lower degree of orientation in the melt at higher temperatures. On the other hand an increase in mould temperature changes the crystallization of the melt and therefore it could cause a change in structure. Finally, it can also be seen that the pressure drop across the different gates follows a similar pattern to that of the tensile modulus.

Figure 6 shows an overall tendency of the tensile modulus to decrease with increasing temperature.

The significant change in modulus occurs only in a narrow temperature range (428 - 446°F). This phenomenon cannot be explained in terms of the pressure drop across the gate or the pressure required to fill the cavity. In this case it probably can be related to the crystallization kinetics of the material under a critical temperature gradient causing a different structure.

As expected, this figure also shows that, samples having a weldline exhibit lower tensile modulus values. This behaviour is more evident at lower melt temperature values. Furthermore, the weld line sample shows a melt temperature independent tensile modulus. This could be caused by a more uniform temperature distribution along the sample since each stream has to travel a shorter distance.

Figure 7 presents the effect of the injection pressure on the tensile modulus. As the pressure increases the tensile

modulus decreases for both samples with and without weldline. This could be explained by the fact that a higher injection/holding pressure would reduce the orientation in the sample.

On going studies on HDPE and geometrical and processing variables such as change in thickness and shape of the part have shown similar effects on the mechanical properties (30% variation of the elastic modulus) as well as anisotropy within the samples.

CONCLUSIONS

The preliminary results given in this paper show that there is a correlation between the gate geometry - represented by different shear rate patterns - and the tensile properties of the moulded part. It appears that the mechanical properties increase with increasing shear rate. The change is more significant at higher injection pressures and lower melt temperatures.

For the case of a particular gate the changes in mechanical properties can be related to processing parameters. This can be very important with longer flow paths from the gate and smaller part thickness.

ACKNOWLEDGEMENTS

The authors wish to thank Mr. Ghislain Chouinard for carrying out the moulding and characterization tests.

REFERENCES

1. W. Dietz, J.L. White, E.S. Clark, Polym. Eng. Sci., 18, 273 (1978).

2. F.H. Moy, M.R. Kamal, Polym. Eng. Sci., 20, 957 (1980).

3. I.J. Catic, Polym. Eng. Sci., 19, 893 (1979).

4. P. Girard, G. Salloum, L.P. Hébert, B. Sanschagrin, SPE ANTEC Tech. Papers, 32, 151 (1986).

5. H.W. Cox, C.C. Mentzer, Polym. Eng. Sci., 26, 490 (1986).

6. D.C. Paulson, SPE ANTEC Tech. Papers, 13, 1009 (1967).

7. S.C. Malguarnera, A.I. Manisali, Polym. Eng. Sci., 21, 586 (1981).

8. S.C. Malguarnera, A.I. Manisali, D.C. Riggs, Polym. Eng. Sci., 21, 1149 (1981).

9. J. Kubat, J.A. Manson, M. Rigdahl, Polym. Eng. Sci., 23, 877 (1983).

10. Th. Schacht, V. Maier, K. Esser, O. Kretzschmar, Th. Schmidt, Advances in Polymer Technology, 5, 99 (1985).

11. G. Salloum, G. Laguë, R. Connolly, P. Girard, Proceedings of the CAD/CAM and Robotics Conference - CASA, SME -, Toronto (June 1986).

LIST OF FIGURES

LIST OF TABLES

TABLE 1: Experimental Conditions

PROCESS VARIABLES

Variable	Injection Pressure (psi)	Melt Temperature (°F)	Mould Temperature (°F)	Cooling Time (S)
Range	6000 - 13000	410-464	86 - 140	12 -28
Basic Condition	10000	428	113	20

GATE DIMENSIONS

Number	Length (L) (in)	Width (W) (in)	Thickness (H) (in)	Area (A) (in^2)
1	0.394	0.236	0.125	0.0297
2	0.394	0.354	0.125	0.0233
3	0.394	0.055	0.0394	0.00217
4	0.394	0.157	0.0788	0.0124

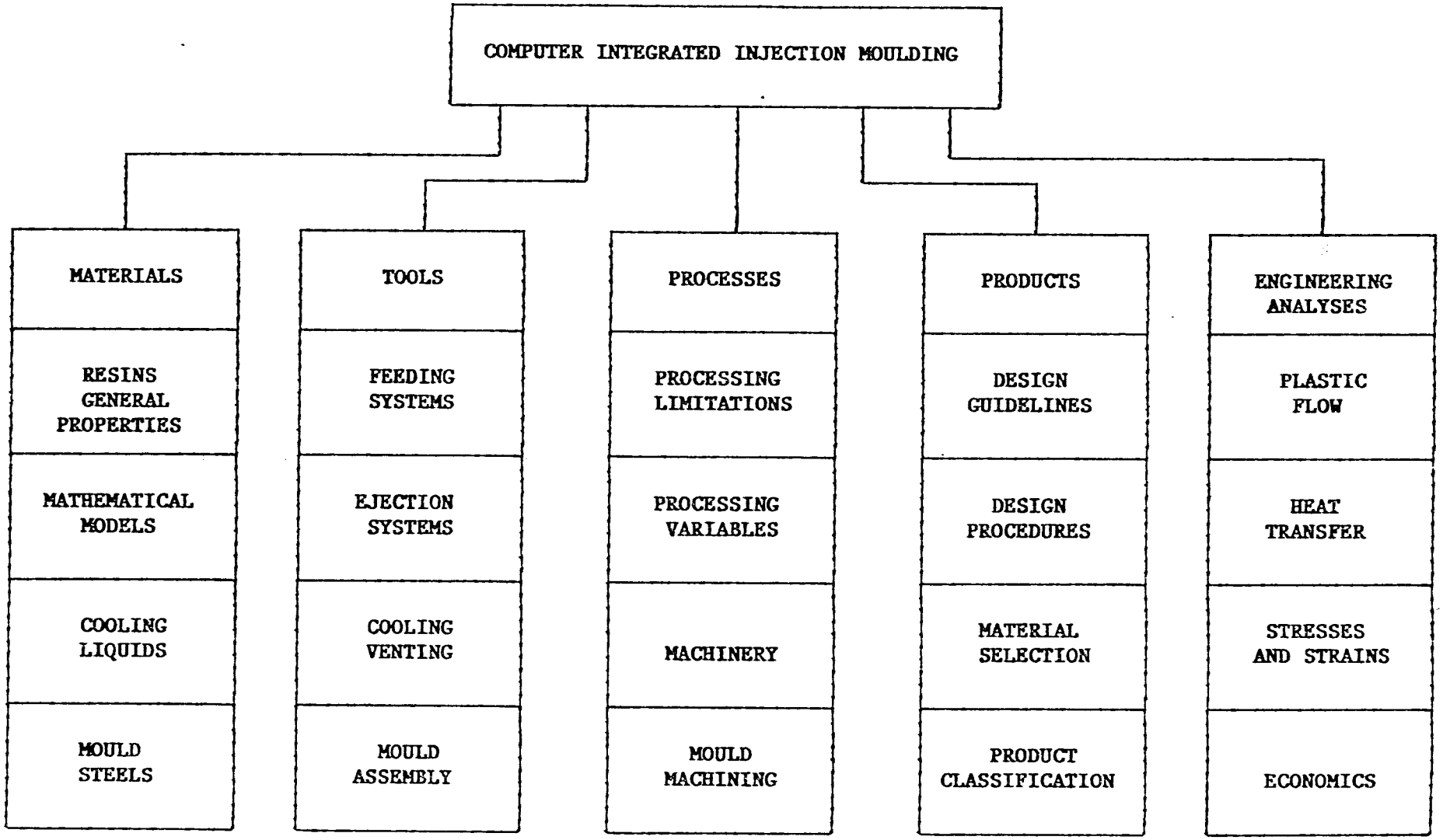

FIGURE 1. COMPUTER INTEGRATED INJECTION MOULDING

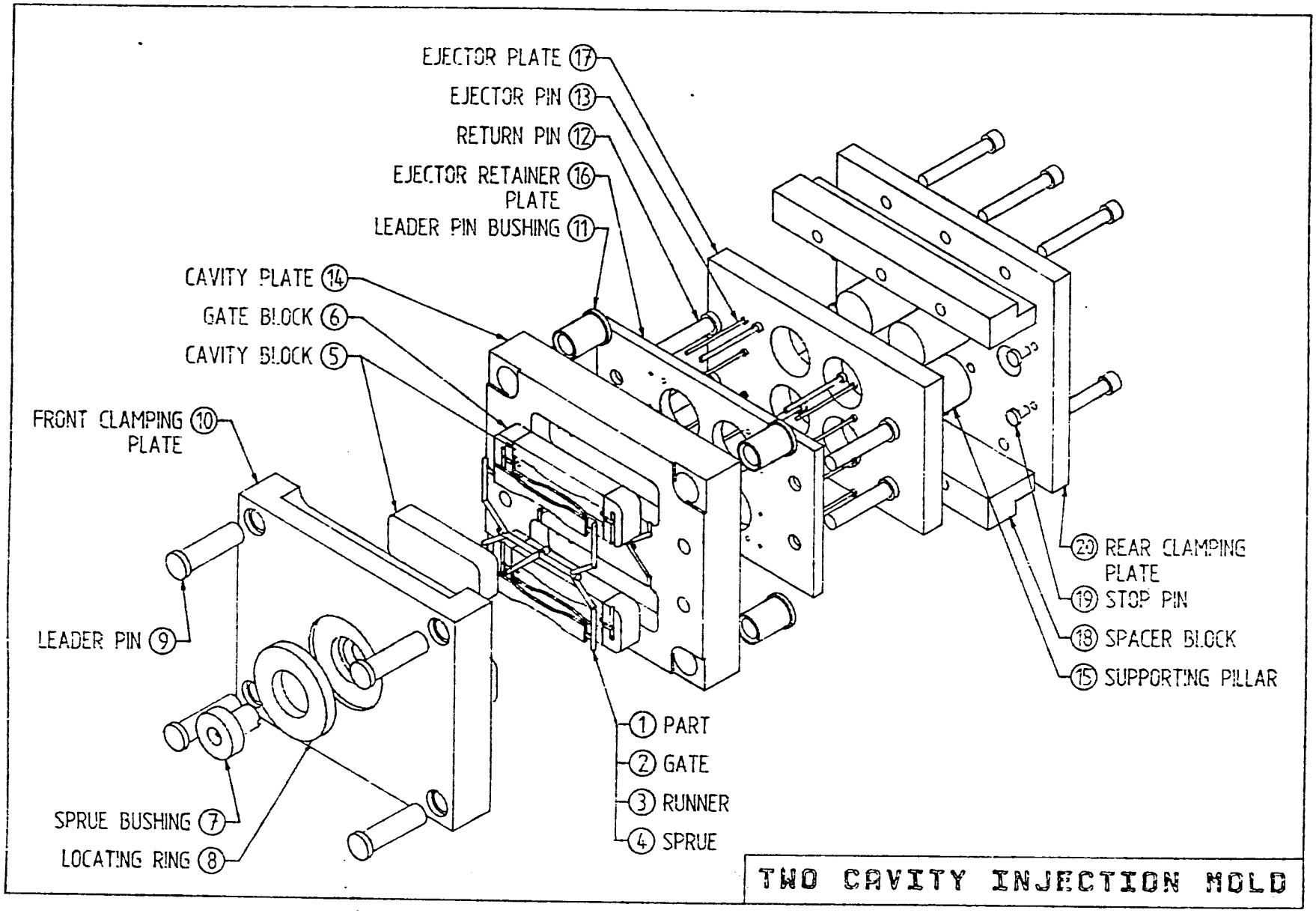

Figure 2. Mold Geometry .

Figure 3. Shear Rate Patterns.

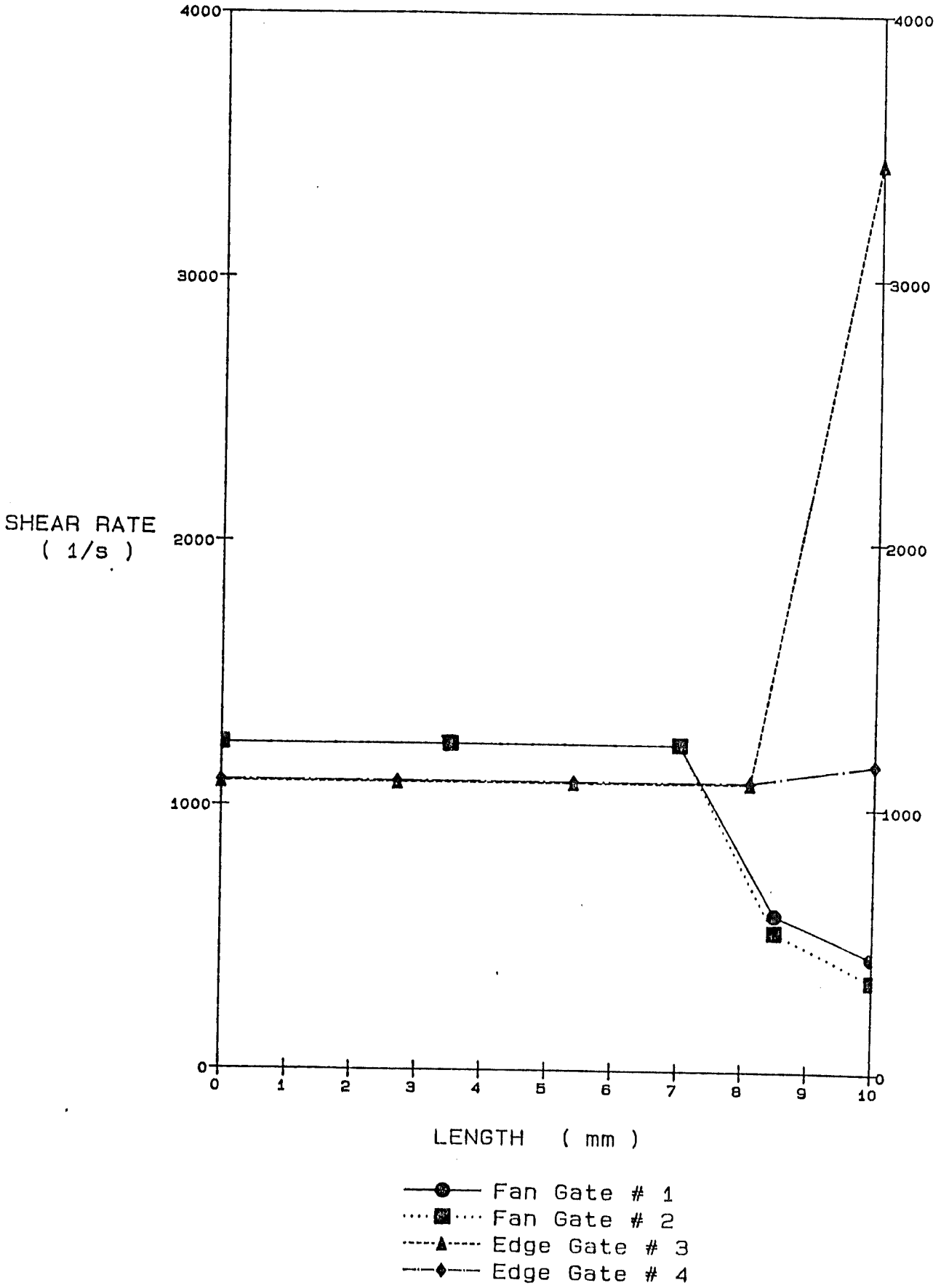

Figure 4. Tensile Modulus Vs. Injection Pressure.

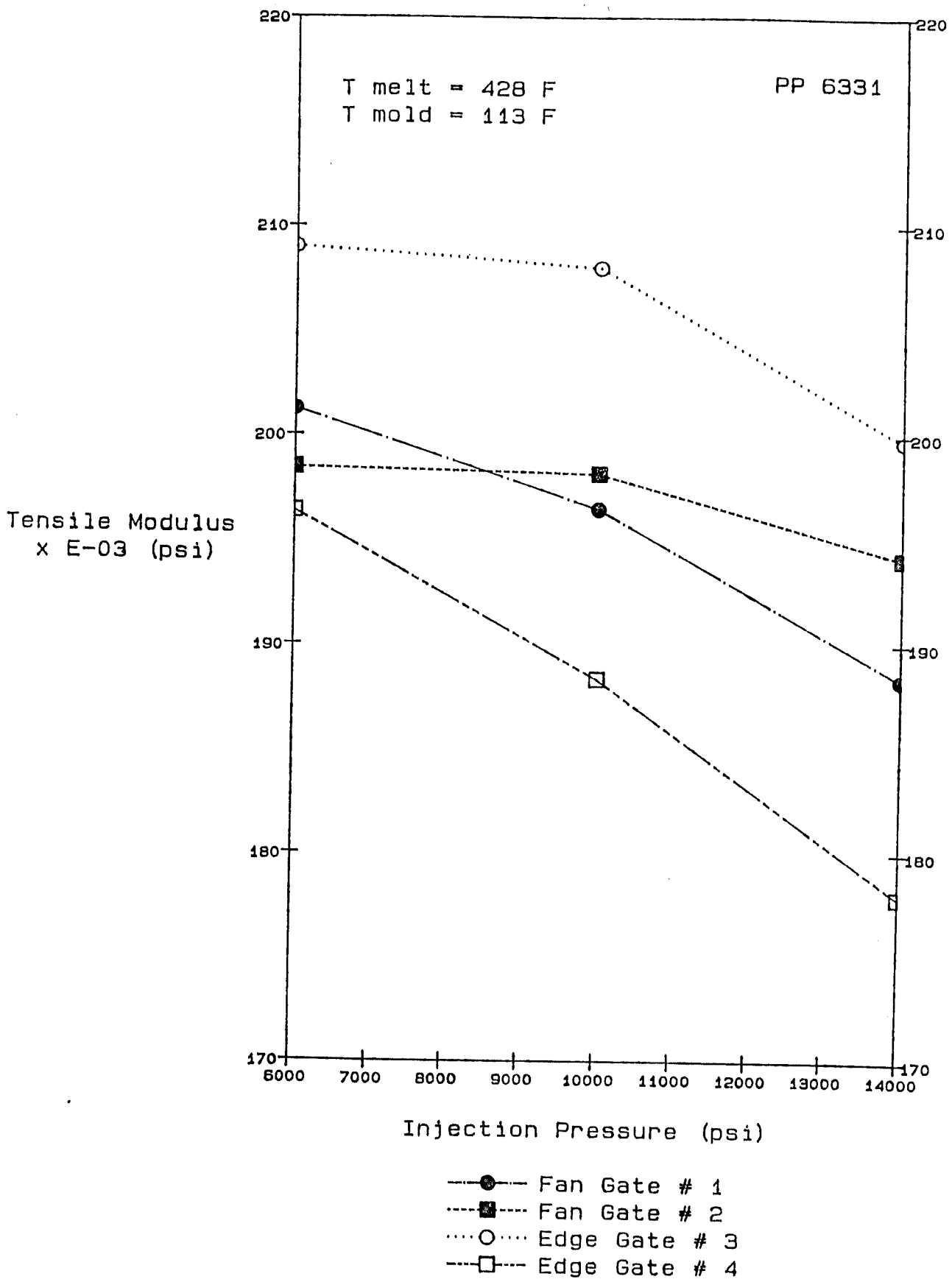

Figure 5. Tensile Modulus: Effect of melt and mold Temperature.

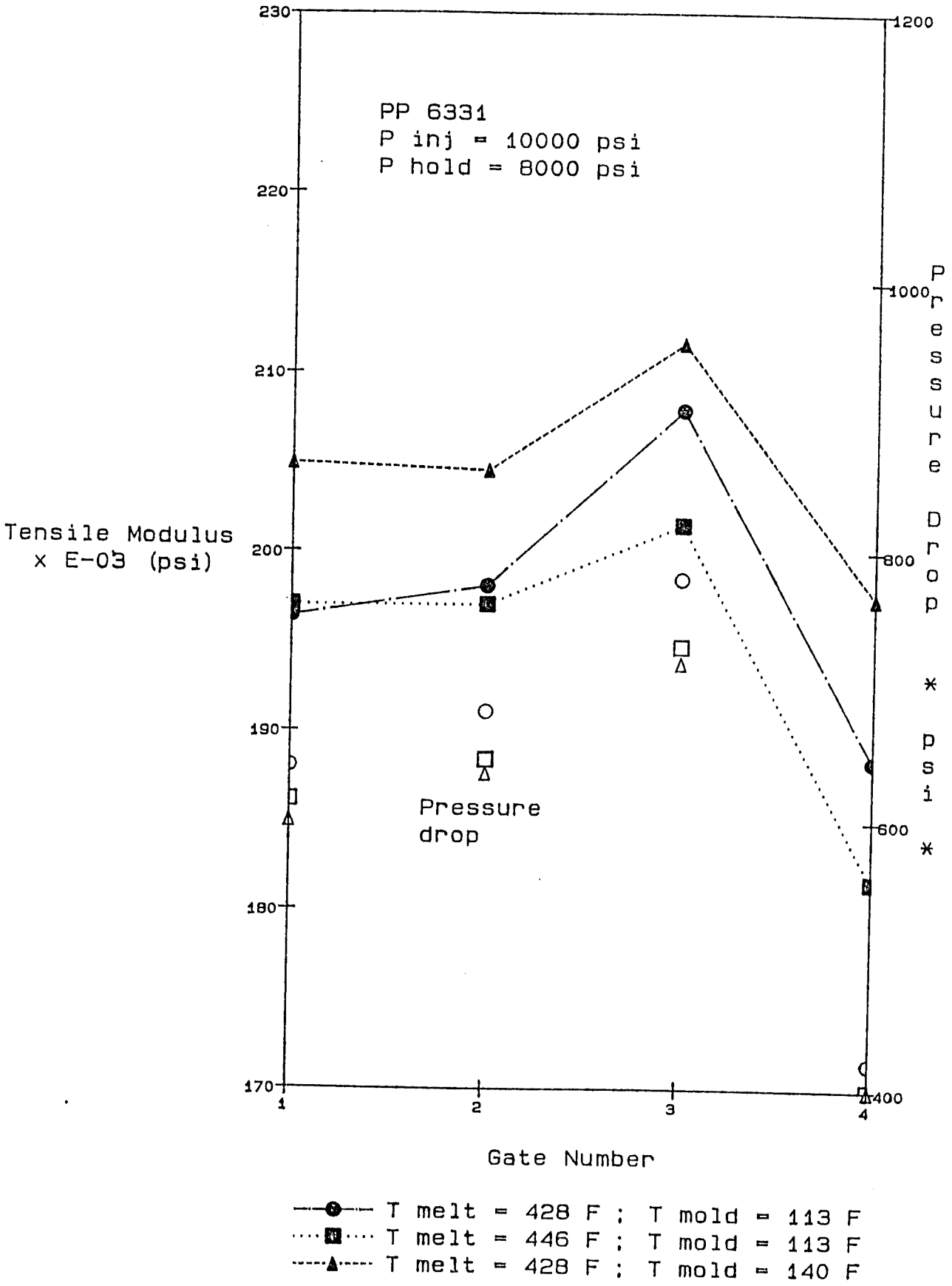

Figure 6. Tensile Modulus vs.
Melt Temperature.

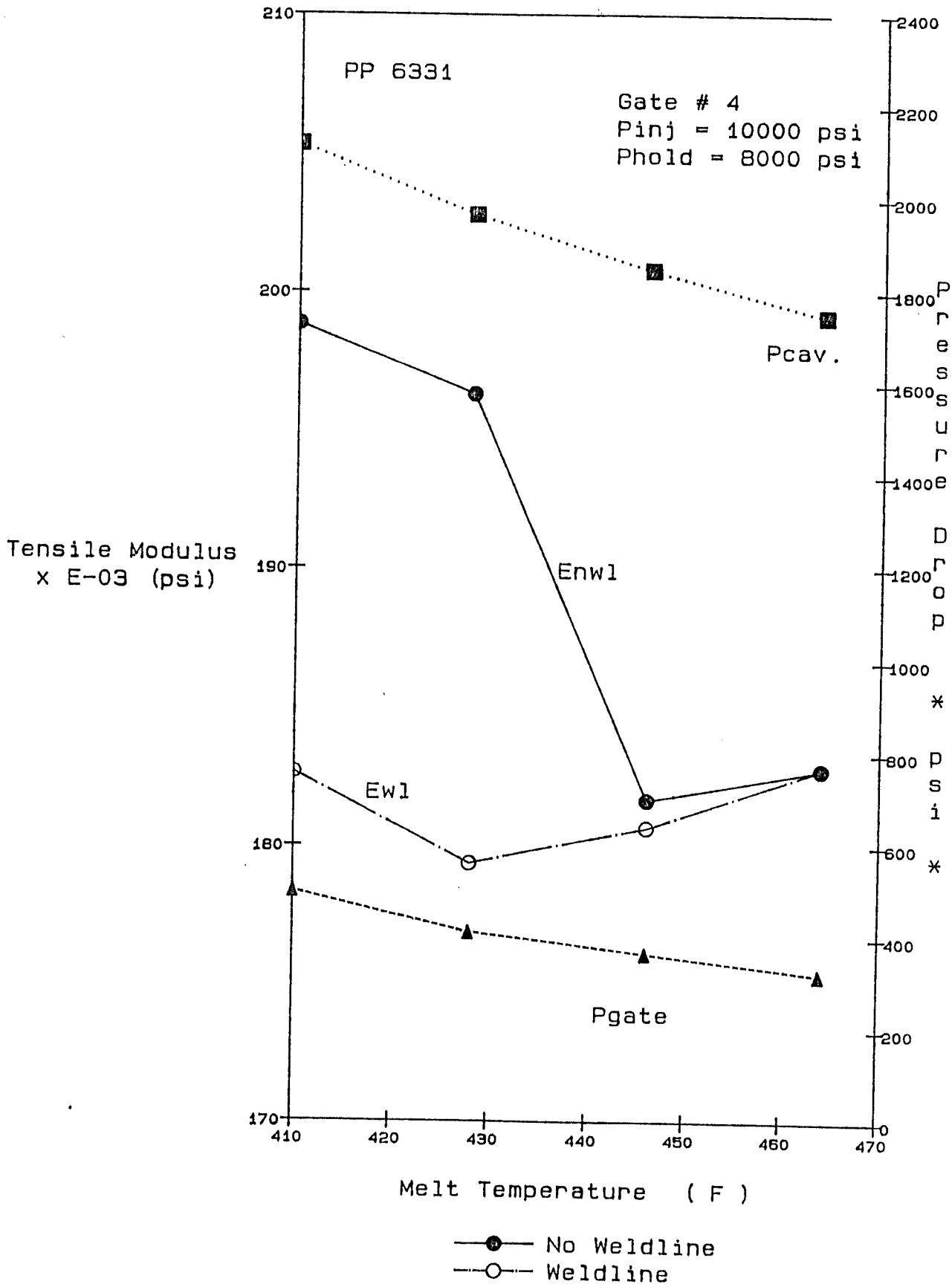

Figure 7. Tensile Modulus vs. Injection Pressure.