Short synthesis of 1,3Z,6Z,9Z-tetraene hydrocarbons. Lepidopteran sex attractants

Millar, Jocelyn G.; Underhill, Edward W.

Publisher's version / Version de l'éditeur:
https://doi.org/10.1139/v86-402
Canadian Journal of Chemistry, 64, 12, pp. 2427-2430, 1986-12-01

Short synthesis of 1,3*Z*,6*Z*,9*Z*-tetraene hydrocarbons. Lepidopteran sex attractants[1]

JOCELYN G. MILLAR[2] AND EDWARD W. UNDERHILL
National Research Council, Plant Biotechnology Institute, 110 Gymnasium Road, Saskatoon, Sask., Canada S7N 0W9

Received May 13, 1986

JOCELYN G. MILLAR and EDWARD W. UNDERHILL. Can. J. Chem. **64**, 2427 (1986).

A short, convergent synthesis of 1,3*Z*,6*Z*,9*Z*-tetraene hydrocarbons was developed. A key step was the regioselective alkylation of 1,5-dibromo-2-pentyne. The method was used to synthesize tetraenes of chain lengths C_{18}–C_{20}, to be used in field trials as sex attractants and (or) inhibitors of the winter moth, *Operophtera brumata* L., and the Bruce spanworm *O. bruceata* H. (Lepidoptera: Geometridae).

JOCELYN G. MILLAR et EDWARD W. UNDERHILL. Can. J. Chem. **64**, 2427 (1986).

On a mis au point une courte synthèse convergente des hydrocarbures tétraéniques-1,3(*Z*),6(*Z*),9(*Z*). Une étape clé implique l'alcoylation régiosélective du dibromo-1,5 pentyne-2. On a utilisé la méthode pour synthétiser des tétraènes comportant de 18 à 20 atomes de carbone; on a utilisé ces hydrocarbures pour déterminer leurs propriétés comme attractant sexuel et (ou) inhibiteurs des espèces *Operophtera brumata* L. et *O. bruceata* H. (Lepidoptera; Geometridae).

[Traduit par la revue]

To date, two 1,3*Z*,6*Z*,9*Z*-tetraene hydrocarbons **1** (Scheme 1) have been reported as lepidopteran sex attractants. These are the nonadecatetraene **1***b*, which appears to be the sole component in the sex pheromone of the winter moth, *Operophtera brumata* L. (Lepidoptera: Geometridae) (1, 2), and the heneicosatetraene **1***d*, which is one of several components in the sex pheromone of *Utetheisa ornatrix* L. (Lepidoptera: Arctiidae) (3). As these homologous hydrocarbons were found in species from two different families, it is very likely that these compounds or their homologs are sex pheromone components for other lepidopteran species as well (4). As part of our work in screening potential sex attractants, we were interested in obtaining a series of these compounds for field testing. In particular, we wanted the tetraenes **1***a*–*c* to test as sex attractants and (or) inhibitors for two sympatric species, *O. brumata*, mentioned above, and the Bruce spanworm, *O. bruceata* H. Both species are morphologically very similar, and can only be differentiated by dissection. In addition, they both appear to use the nonadecatetraene **1***b* as a sex attractant (1). One species, *O. brumata*, is an economic pest of hardwoods and fruit trees (1), while the other is of lesser economic importance (5, 6). It would therefore be advantageous to develop sex attractant lures that were specific for each species.

To construct efficiently the series of homologous tetraenes, we required a common intermediate to which a chain of varying length could be appended. Of the five previously reported syntheses of tetraenes of this type, three routes (2, 7, 8) involved progressive extension of the carbon skeleton from the saturated end of the chain, which is not efficient for synthesis of a series of homologs. The other two routes (4, 9), one of which (9) appeared while our work was in progress, were amenable to synthesis of a homologous series. However, both routes made use of protecting groups, thus necessitating extra steps for the introduction and removal of these groups, and for the subsequent manipulation of the deprotected functionality. We felt that a considerably shorter synthesis that did not require protecting groups could be devised, by judicious choice of the sequence of steps and of regioselective reaction conditions.

This more direct approach has proven to be successful (Scheme 1). Thus, cuprous salt-catalyzed reaction of 3-butyn-1-ol **2** with aqueous formaldehyde gave diol **3** (55–62%) (10). The diol was converted to the dibromide **4** (89%) by treatment with carbon tetrabromide and triphenylphosphine (11). The diynes **6***a*–*c* required for the alkylation step were constructed by cuprous salt-catalyzed reaction of the Grignard reagent of the appropriate terminal alkyne **5** with propargyl bromide (12, 13). Cuprous iodide-catalyzed reaction of the Grignard reagents of the diynes **6** with dibromide **4** (12, 13) selectively gave the desired 1-bromo-3,6,9-alkatriynes **7**, contaminated with small amounts (6–12%) of isomeric impurities. The impurities were easily removed by recrystallization of the crude bromotriynes from pentane at 0°C (64–69%). The pure bromotriynes **7** were stereoselectively reduced with dicyclohexylborane to the bromotrienes **8** (59–65%) (14, 15). In our hands, this method of partial hydrogenation has proven to be completely stereospecific, with no trace of *trans* isomers detected by capillary gc/ms of the crude product. In contrast, we and others (16) have found that catalytic semihydrogenation of methylene-interrupted poly-ynes is frequently beset with problems such as catalyst poisoning with trace impurities, isomerization of the resulting *cis* double bonds, and over-reduction.

The syntheses were completed by base-induced elimination of HBr. Thus, heterogeneous mixtures of potassium *tert*-butoxide, bromotrienes **8**, and phase transfer catalyst (18-crown-6), stirred in hexane at −10 to 0°C (17), gave tetraenes **1** (58–65% isolated yields). Temperature control was critical in this reaction, as warming the mixture to room temperature gave reduced yields and some isomerization, while the reaction proceeded very slowly below −15°C.

This method thus represents a short and highly stereoselective route to 1,3*Z*,6*Z*,9*Z*-tetraene hydrocarbons.

Experimental

All reactions were carried out under N_2, in oven-dried glassware. THF was distilled from benzophenone ketyl under N_2 before use. Routine capillary gc runs were carried out with a Hewlett–Packard 5790 instrument, fitted with DB-5 column (30 m × 0.25 mm). Proton nmr spectra were recorded at 360 MHz on a Bruker AM-360-WB spectrometer. The ir spectra were recorded on a Perkin–Elmer 237B instrument. Electron impact (EI) mass spectra (70 eV unless otherwise stated) were recorded on a Finnigan 4000E gc–ms unit with an Incos 2300 data system, using an SP2100 capillary gc column. The ms data are reported in the form m/z (relative intensity). Accurate mass measurements were performed by the Mass Spectrometry Laboratory, Psychiatric Research Unit, University of Saskatchewan, with an

[1]Issued as NRC No. 26110.
[2]Author to whom correspondence may be addressed.

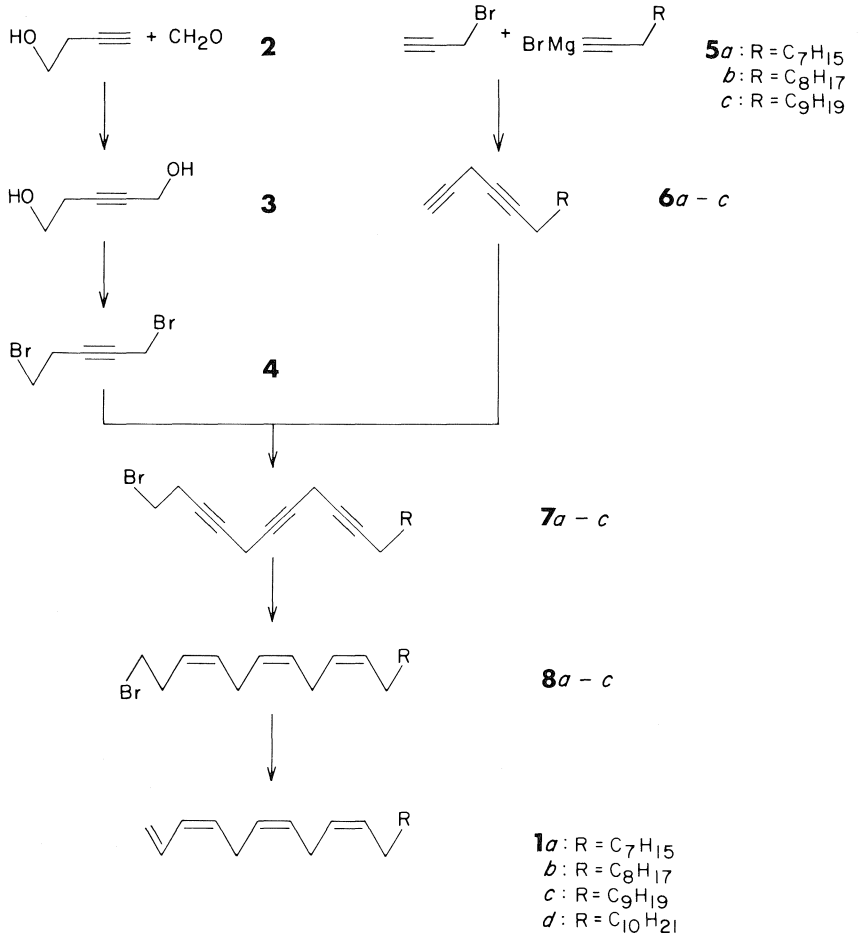

SCHEME 1

MS902S instrument with VG console update, using PTFBA internal standard.

Preparation of 2-pentyn-1,5-diol (3)

The preparation of **3** was a minor modification of that previously reported (8). Cuprous chloride (4.0 g, 40 mmol) was dissolved in 12% aqueous HCl (60 mL), and the solution was cooled in an ice bath. 40% Aqueous KOH (60 mL) was added dropwise over 1 h, giving a brown suspension. The mixture was filtered with suction, and the solid residue was washed well with water. The moist solid residue was added to a mixture of 3-butyn-1-ol **2** (13.0 g, 186 mmol), 37% aqueous formaldehyde (21.67 g, 267 mmol), water (4 mL), and $CaCO_3$ (0.2 g). The mixture was refluxed under N_2 for 3 days, cooled to room temperature, diluted with ethyl acetate (250 mL), and dried with anhydrous Na_2SO_4 (10 g). The mixture was filtered with suction through a plug (2.5 cm × 5 cm) of anhydrous Na_2SO_4, and the solids were rinsed thoroughly with ethyl acetate. The filtrate was concentrated and distilled, giving diol **3** as a viscous oil (10.23 g, 55%), bp 90–91°C (0.1 Torr (1 Torr = 133.3 Pa)) (lit. (10) bp 90–95°C (0.03 Torr)); ir (neat) λ_{max}: 3700–3000 (s), 2235 (w), 1100–990 (s) cm^{-1}; nmr (D_2O) δ: 4.09 (t, 2H, J = 2.1 Hz, H-1), 3.56 (t, 2H, J = 6.7 Hz, H-5), 2.35 (tt, 2H, J = 6.7, 2.1 Hz, H-4); ms: 100 (M^+, 0.03), 99 (0.24), 82 (20.6), 70 (7.5), 69 (8.5), 53 (20.8), 52 (100), 51 (18.9), 50 (12.5), 44 (13.9).

Preparation of 1,5-dibromo-2-pentyne (4)

A solution of diol **3** (2.0 g, 20 mmol) and carbon tetrabromide (14.94 g, 45 mmol) in dry CH_2Cl_2 (100 mL) was cooled to 0°C, and triphenylphosphine (11.79 g, 45 mmol) was added in portions over 20 min. The mixture was warmed to 20°C over 1 h. The CH_2Cl_2 was removed on a rotary evaporator, with no heating, and hexane (100 mL) was added to the residue. The mixture was cooled to 0°C and filtered. The solid residue was washed with ice-cold hexane (2 × 25 mL), and the filtrate was concentrated and distilled under vacuum. After a large forerun of bromoform and excess carbon tetrabromide, dibromide **4** was obtained as a pale yellow oil (4.01 g, 89%), bp 40–43°C (0.04 Torr); ir (neat) λ_{max}: 2240 cm^{-1} (w); nmr ($CDCl_3$) δ: 3.80 (t, 2H, J = 2.4 Hz, H-1), 3.33 (t, 2H, J = 7.2 Hz, H-5), 2.71 (tt, 2H, J = 7.2, 2.4 Hz, H-4); ms: 228 (3.5), 226 (6.8), 224 (3.5), 147 (55.1), 145 (56.7), 95 (2.8), 93 (3.5), 66 (50.4), 65 (100), 63 (11.7). *Exact Mass* calcd. for $C_5H_6{}^{79}Br_2$: 223.8836; found 223.9118.

Preparation of 1,4-diynes (6)

Ethyl magnesium bromide (approximately 65 mmol) was prepared from ethyl bromide (7.63 g, 70 mmol) and Mg turnings (1.58 g, 65 mmol) in THF (75 mL). 1-Decyne **5***a* (8.28 g, 60 mmol) was added dropwise, and the solution was heated at 40–45°C for 2 h. The solution was then cooled to < −10°C in an ice–salt bath, CuI (190 mg, 1 mmol) was added, and the mixture was stirred 20 min. Propargyl bromide (7.3 g, 61 mmol) was then added dropwise, maintaining the temperature < −10°C. The mixture was warmed to 20°C over 3 h, stirred overnight, quenched with aqueous NH_4Cl (100 mL), and extracted with hexane (3 × 100 mL). The combined organic extracts were dried (Na_2SO_4), concentrated, and distilled under vacuum, giving diyne **6***a* (7.85 g, 74%) as a colourless oil, bp 53°C (0.2 Torr), which yellowed rapidly upon exposure to air; ir (neat) λ_{max}: 3330 (m), 2960 (m), 2935 (s), 2860 (m), 2130 (w) cm^{-1}; nmr ($CDCl_3$) δ: 3.12 (dt, 2H, J = 2.7, 2.4 Hz, H-3), 2.13 (tt, 2H, J = 7.1, 2.4 Hz, H-6), 2.03 (t, 1H, J = 2.7 Hz, H-1), 1.46 (br quintet, 2H, J = 7.0 Hz, H-7), 1.4–1.1 (m, 10H, H-8 to H-12), 0.86 (t, 3H, J = 7 Hz, H-13); ms (25 eV): 176 (M^+, 0.1), 119 (20.4), 105 (35.7), 95 (29.5), 91 (100), 81 (46.7), 79 (32.6), 78 (27.0), 67 (40.2), 55 (44.8).

The known 1,4-tetradecadiyne **6***b* was similarly prepared in 75% yield, bp 65°C (0.15 Torr) (lit. (7) bp 125°C (25 Torr)). 1,4-Penta-

decadiyne **6***c* was prepared in 76% yield, bp 82°C (0.1 Torr). The ir and nmr spectra were analogous to those of **6***a*. Mass spectra (25 eV) were characterized by a base peak at m/z 91, diagnostic fragments at $M - 39$ (2–4%) and $M - 81$ (3–9%), and a series of ions at $M - C_nH_{2n+1}$. The molecular ion was very small or absent.

Capillary gc/ms showed that the diynes **6** were contaminated with small amounts of isomeric materials (≃5%). These isomeric impurities were carried through to the next step, where they were removed during the purification procedure. The diynes appeared to be stable for several months if stored at −25°C under N_2.

Preparation of 1-bromo-3,6,9-triynes (7)

Diyne **6***a* (1.85 g, 10.5 mmol) was added to a freshly prepared solution of ≃11.5 mmol of ethyl magnesium bromide (prepared from 280 mg Mg (11.5 mmol) and ethyl bromide (1.36 g, 12.5 mmol)) in THF (15 mL) at 20°C. The resulting solution was warmed at 40–45°C for 2 h, then cooled to 0°C, and CuI (95 mg, 0.5 mmol) was added. The mixture was stirred for 20 min, then cooled to < −15°C in an ice–salt bath, and a solution of dilbromide **4** (2.26 g, 10 mmol) in THF (5 mL) was added dropwise over 20 min. The mixture was warmed to 0°C over 2 h, stirred at 0°C for 8 h, and warmed to 20°C overnight. The mixture was poured into 5% aqueous NH_4Cl (50 mL), extracted with hexane (3 × 25 mL), backwashed with brine (1 × 25 mL), dried (Na_2SO_4), and filtered with suction through a plug (3 cm × 3 cm) of Na_2SO_4. The filtrate was concentrated under reduced pressure, and the residue was recrystallized from hexane at −25°C, giving **7***a* (2.21 g, 69%) as white plates, mp 26–27.5°C, which slowly yellowed after exposure to air and (or) light; ir (neat) λ_{max}: 2960 (m), 2930 (s), 2860 (m), 2215 (w) cm^{-1}; nmr ($CDCl_3$) δ: 3.39 (t, 2H, J = 7.4 Hz, H-1), 3.13 (m, 4H, H-5, H-8), 2.71 (tt, 2H, J = 7.4, 2.2 Hz, H-2), 2.13 (tt, 2H, J = 7.2, 2.2 Hz, H-11), 1.46 (m, 2H, H-12), 1.5–1.1 (m, 10H, H-13 to H-17), 0.86 (t, 3H, J = 6.7 Hz, H-18); ms (25 eV): 279, 277 ($M - 43$, 1.2), 155 (33.0), 143 (34.7), 137 (48.4), 129 (46.7), 128 (48.1), 95 (54.4), 91 (35.0), 82 (45.4), 81 (100), 67 (61.4). *Exact Mass* calcd. for $C_{18}H_{25}{}^{81}Br - C_3H_7$: 279.0572; found: 279.0493.

1-Bromo-3,6,9-nonadecatriyne **7***b* was similarly prepared in 81% crude yield. In this case the crude material was used directly in the next step; an analytical sample recrystallized from hexane at −10°C gave mp 30–32°C. 1-Bromo-3,6,9-eicosatriyne **7***c* was obtained in 64% yield after recrystallization from hexane, mp 35–37°C. The ir and nmr spectra of **7***b* and **7***c* were analogous to those of **7***a*. Mass spectra (25 eV) were characterized by a base peak at m/z 81, doublets of ions at (279, 277), (265, 263), etc., and diagnostic fragments at $M - C_8H_8Br$ (30–50%), $M - C_5H_6Br$ (9%), and m/z 211 (2–4%). The molecular ion was very small or absent.

The pure crystalline compounds gave a single peak on capillary gc, and appear to be stable when stored at −25°C under N_2.

Preparation of 1-bromo-3Z,6Z,9Z-trienes (8)

A suspension of dicyclohexylborane (21 mmol) was prepared by dropwise addition of cyclohexene (3.45 g, 42 mmol) to a solution of borane–dimethylsulfide complex (10 *M*, 2.1 mL, 21 mmol) in THF (25 mL), maintaining the temperature at 0–5°C. The resulting mixture was warmed to 20°C, stirred 2 h, then cooled to 0°C again, and bromotriyne **7***a* (1.61 g, 5.0 mmol) in THF (5 mL) was added. The mixture was warmed to 20°C over 2 h, and stirred an additional 2 h. Glacial acetic acid (8 mL) was then added dropwise and the resulting solution was stirred overnight. The solution was then cooled and made basic by slow addition of aqueous NaOH (5 *M*, 30 mL), followed by dropwise addition of 30% aqueous H_2O_2 (8 mL). The resulting mixture was diluted with water (100 mL) and extracted with pentane (3 × 50 mL). The combined organic extracts were dried (Na_2SO_4) and concentrated, and low-boiling by-products were removed by warming at 45°C under vacuum (0.1 Torr). The residue was purified by flash chromatography on silica gel (3.5 cm id × 20 cm), eluting with hexane, giving **8***a* (1.07 g, 65%) as a colourless oil, isomerically pure by capillary gc; ir (neat) λ_{max}: 3020 (m), 2960 (m), 2930 (s), 2860 (m), 1210 (m) cm^{-1}; ^1H nmr ($CDCl_3$) δ: 5.51 (dtt, 1H, J = 10.7, 6.3, 1.4 Hz, H-4), 5.42–5.32 (m, 4H, H-3, H-6, H-7, H-10), 5.31 (dtt, 1H, J = 10.6, 6.9, 1.3 Hz, H-9), 3.36 (t, 2H, J = 7.1 Hz, H-1), 2.80 (m, 4H, H-5, H-8), 2.64 (m, 2H, H-2), 2.04 (m, 2H, H-11), 1.5–1.1 (m, 12H, H-12 to H-17), 0.86 (t, 3H, J = 6.9 Hz, H-18); ms: 328, 326 (M^+, 0.6), 188 (29.3), 186 (30.6), 95 (19.3), 93 (33.8), 82 (20.0), 81 (27.9), 80 (55.7), 79 (100), 67 (41.5), 55 (15.6).

Exact Mass for **8***a* could not be measured due to interference from the internal standard. *Exact Mass* for a pure sample of **8***b*, calcd. for $C_{19}H_{33}{}^{81}Br$: 342.2745; found: 342.1914.

Known triene **8***b* (4, 9) was similarly prepared from crude triyne **7***b*, in 71% overall yield from **4**. The isolated material was contaminated with isomers (7%), and was used in the next step without further purification. Triene **8***c* was prepared in 59% yield from pure **7***c*. The ir and nmr spectra of **8***b* and **8***c* were analogous to those of **8***a*. Mass spectra were characterized by a base peak at m/z 79, a doublet at $M - C_4H_6$ (1%), a doublet at m/z 186 and 188 (15–20%), and doublets at (91, 93), (105, 107), etc. The molecular ions were small but discernable (1%).

Preparation of 1,3Z,6Z,9Z-tetraenes (1)

A solution of bromotriene **8***a* (0.50 g, 1.53 mmol) in hexane (15 mL) was cooled to −23°C (CCl_4/CO_2 slush) and potassium *tert*-butoxide (250 mg, 2.23 mmol) and 18-crown-6 (40 mg, 0.15 mmol) were added sequentially. The mixture was slowly warmed to 0°C, and stirred at 0°C for 3 h. The reaction was quenched by addition of powdered NH_4Cl (1 g) and stirring for 1 h at 0°C. The mixture was then poured into ice-water (25 mL), and the organic layer was separated, washed with brine, and passed through a short column of neutral alumina (2 cm id × 5 cm). The column was rinsed well with hexane, and the combined eluate was concentrated, giving tetraene **1***a* (215 mg, 58%), >98% pure by capillary gc (the only impurity detected was 1.4% unreacted starting material); ir (neat) λ_{max}: 3085 (w), 3020 (m), 2960 (m), 2930 (s), 2860 (m), 995 (m) cm^{-1}; nmr ($CDCl_3$) δ: 6.65 (dddd, 1H, J = 16.9, 10.8, 10.6, 1.1 Hz, H-2), 6.00 (br t, 1H, J = 10.8 Hz, H-3), 5.46–5.26 (m, 5H, H-4, H-6, H-7, H-9, H-10), 5.19 (br d, 1H, J = 16.9 Hz, H-1 *cis*), 5.10 (br d, 1H, J = 10.1 Hz, H-1 *trans*), 2.95 (t, 2H, J = 6.1 Hz, H-5), 2.80 (t, 2H, J = 6.1 Hz, H-8), 2.04 (br dt, 2H, J = 6.8, 6.7 Hz, H-11), 1.41–1.1 (m, 12H, H-12 to H-17), 0.86 (t, 3H, J = 6.6 Hz, H-18); ms (25 eV): 246 (M^+, 4.2), 192 (15.4), 119 (25.0), 106 (29.0), 105 (24.2), 93 (44.4), 92 (46.1), 91 (64.1), 80 (100), 79 (87.1), 78 (33.0), 67 (29.6). *Exact Mass* calcd. for $C_{18}H_{30}$: 246.2348; found: 246.2356.

Known tetraene **1***b* (2, 4, 7, 9) was prepared from the isomerically impure **8***b*. After purification by flash chromatography on $AgNO_3$-impregnated silica gel (10%), eluting with stepwise gradients of ether in pentane, chemically and isomerically pure tetraene **1***b* was obtained in 63% yield. All spectra were identical to literature data. Tetraene **1***c* was prepared in 65% yield as described for **1***a*. The ir and nmr spectra were completely in accord with those of **1***a* and **1***b*. Mass spectra of **1***b* and **1***c* were characterized by a base peak at m/z 80, diagnostic peaks at $M - 41$ (2–3%) and $M - 54$ (10–15%), and clusters of ions centered at m/z 80, 91, 106, 119, 133, 147, 161, and 175. The molecular ion was easily discernable (4–6%).

1. W. L. Roelofs, A. S. Hill, C. E. Linn, J. Meinwald, S. C. Jain, H. J. Herbert, and R. F. Smith. Science, **217**, 657 (1982).
2. S. C. Jain, W. L. Roelofs, and J. Meinwald. J. Org. Chem. **48**, 227 (1983).
3. W. E. Connor, T. Eisner, R. K. Vander Meer, A. Guerrero, D. Ghiringelli, and J. Meinwald. Behav. Ecol. Sociobiol. **7**, 55 (1980).
4. W. Huang, S. P. Pulaski, and J. Meinwald. J. Org. Chem. **48**, 2270 (1983).
5. C. E. Brown. Can. Entomol. **94**, 1103 (1962).
6. R. Martineau. Insects harmful to forest trees. Multiscience Publications Ltd., Montreal. 1984. pp. 158–160.
7. H. J. Bestmann, T. Brosche, K. H. Koschatsky, K. Michaelis, H. Platz, K. Roth, J. Suss, O. Vostrowsky, and W. Knauf. Tetrahedron Lett. **23**, 4077 (1982).
8. S. C. Jain, D. E. Dussourd, W. E. Connor, T. Eisner, A. Guerrero, and J. Meinwald. J. Org. Chem. **48**, 2266 (1983).

9. R. BAKER, M. J. O'MAHONY, and C. J. SWAIN. J. Chem. Res. **5**, 190 (1984).
10. O. HEUBERGER and L. N. OWEN. J. Chem. Soc. 910 (1952).
11. R. G. WEISS and E. I. SNYDER. J. Org. Chem. **36**, 403 (1971).
12. L. BRANDSMA. Preparative acetylenic chemistry. Elsevier Publishing Co., Amsterdam. 1971. p. 31.
13. J. M. OSBOND, P. G. PHILPOTT, and J. C. WICKENS. J. Chem. Soc. 2779 (1961).
14. H. C. BROWN, A. K. MANDAL, and S. U. KULKARNI. J. Org. Chem. **42**, 1392 (1977).
15. H. C. BROWN. Organic syntheses via boranes. John Wiley & Sons, Inc., New York. 1975. pp. 81, 98, 99.
16. E. N. MARVELL and T. LI. Synthesis, 457 (1973).
17. E. VON DEHMLOW and M. LISSEL. Synthesis, 272 (1979).