Host genetic requirements for DNA release of lactococcal phage TP901-1

Ruiz-Cruz, Sofía; Erazo Garzon, Andrea; Kelleher, Philip; Bottacini, Francesca; Breum, Solvej Østergaard; Neve, Horst; Heller, Knut J.; Vogensen, Finn K.; Palussière, Simon; Courtin, Pascal; Chapot-Chartier, Marie-Pierre; Vinogradov, Evgeny; Sadovskaya, Irina; Mahony, Jennifer; van Sinderen, Douwe

Publisher's version / Version de l'éditeur:
https://doi.org/10.1111/1751-7915.14156
Microbial Biotechnology, 15, 12, pp. 2875-2889, 2022-10-19

Received: 6 July 2022 | Accepted: 27 September 2022

DOI: 10.1111/1751-7915.14156

RESEARCH ARTICLE

microbial biotechnology Open Access

Host genetic requirements for DNA release of lactococcal phage TP901-1

Sofía Ruiz-Cruz[1] | **Andrea Erazo Garzon**[1] | **Philip Kelleher**[1] | **Francesca Bottacini**[1,2] | **Solvej Østergaard Breum**[3] | **Horst Neve**[4,‡] | **Knut J. Heller**[4,‡] | **Finn K. Vogensen**[3] | **Simon Palussière**[5] | **Pascal Courtin**[5] | **Marie-Pierre Chapot-Chartier**[5] | **Evgeny Vinogradov**[6] | **Irina Sadovskaya**[7] | **Jennifer Mahony**[1] | **Douwe van Sinderen**[1]

[1]School of Microbiology & APC Microbiome Ireland, University College Cork, Cork, Ireland
[2]Department of Biological Sciences, Munster Technological University, Cork, Ireland
[3]Section of Microbiology and Fermentation, Department of Food Science, Faculty of Science, University of Copenhagen, Frederiksberg, Denmark
[4]Department of Microbiology and Biotechnology, Max Rubner-Institut, Federal Research Institute of Nutrition and Food, Kiel, Germany
[5]Université Paris-Saclay, INRAE, AgroParisTech, Micalis Institute, Jouy-en-Josas, France
[6]National Research Council Canada, Institute for Biological Sciences, Ottawa, Ontario, Canada
[7]Equipe BPA, Université du Littoral-Côte d'Opale, Institut Charles Violette EA 7394 USC Anses, Boulogne-sur-mer, France

Correspondence
Jennifer Mahony and Douwe van Sinderen, School of Microbiology & APC Microbiome Ireland, University College Cork, Cork, Ireland.
Email: j.mahony@ucc.ie and d.vansinderen@ucc.ie

Present address
Solvej Østergaard Breum, Department of Virus & Microbiological Special Diagnostics, Division of Infectious Disease Preparedness, Statens Serum Institut, Copenhagen, Denmark

Funding information
Science Foundation Ireland, Grant/Award Number: 20/FFP-P/8664, SFI/12/RC/2273-P1 and SFI/12/RC/2273-P2

Abstract

The first step in phage infection is the recognition of, and adsorption to, a receptor located on the host cell surface. This reversible host adsorption step is commonly followed by an irreversible event, which involves phage DNA delivery or release into the bacterial cytoplasm. The molecular components that trigger this latter event are unknown for most phages of Gram-positive bacteria. In the current study, we present a comparative genome analysis of three mutants of *Lactococcus cremoris* 3107, which are resistant to the P335 group phage TP901-1 due to mutations that affect TP901-1 DNA release. Through genetic complementation and phage infection assays, a predicted lactococcal three-component glycosylation system (TGS) was shown to be required for TP901-1 infection. Major cell wall saccharidic components were analysed, but no differences were found. However, heterologous gene expression experiments indicate that this TGS is involved in the glucosylation of a cell envelope-associated component that triggers TP901-1 DNA release. To date, a saccharide modification has not been implicated in the DNA delivery process of a Gram-positive infecting phage.

Sofía Ruiz-Cruz and Andrea Erazo Garzon contributed equally to this work.

‡Retired.

INTRODUCTION

Bacteriophages (or phages) pose a major and persistent threat to the dairy fermentation industry. Infection of starter cultures commonly causes serious disruptions in production regimes with associated economic losses. *Lactococcus lactis* and *Lactococcus cremoris* (the latter previously considered a subspecies of *L. lactis* (Li et al., 2021)) are the most widely used starter cultures in global dairy fermentations. Consequently, their infecting phages have received significant and warranted research attention, becoming an important paradigm for phage-host interactions in Gram-positive bacteria (Mahony et al., 2017). Ten distinct groups of lactococcal phages have been identified based on their morphology and genetic relatedness. Among these, the most prevalent and frequently isolated are siphophages that belong to the genera *Skunavirus* and *Ceduovirus*, along with the heterogeneous P335 group (Deveau et al., 2006). The initial and specific interaction between a tailed phage and its cognate host is typically achieved through a phage-encoded receptor binding protein (RBP) and a surface-exposed receptor moiety. The majority of studied lactococcal phages recognise (part of) a particular cell wall polysaccharide (CWPS) present on the bacterial cell surface (Ainsworth et al., 2014; Dupont et al., 2004; Mahony et al., 2017; Marcelli et al., 2019).

The lactococcal CWPS biosynthetic apparatus is encoded by a large gene cluster that exhibits genetic variability at its 3′ end, based on which four genotypes (types A-D) were identified (Mahony et al., 2013, 2020). Analysis of the chemical composition and architecture of the CWPS isolated from different *Lactococcus* strains (belonging to distinct CWPS genotype [sub]groups) have revealed a structural diversity that dictates, at least in part, the specific host-phage interaction, while simultaneously providing an explanation for the narrow host range of lactococcal phages (Ainsworth et al., 2014; Chapot-Chartier et al., 2010; Farenc et al., 2014; Mahony et al., 2020; Sadovskaya et al., 2017; Vinogradov, Sadovskaya, Courtin, et al., 2018; Vinogradov, Sadovskaya, Grard, et al., 2018).

The CWPS structure of A- and B- type strains comprises a rhamnose-rich linear backbone (rhamnan) substituted by short oligosaccharide chains (Vinogradov, Sadovskaya, Courtin, et al., 2018; Vinogradov, Sadovskaya, Grard, et al., 2018), whereas C- and D-type strains contain two covalently-linked polysaccharides: the rhamnan and a surface-exposed decoration, previously termed as the polysaccharide pellicle (PSP) (Chapot-Chartier et al., 2010; Lavelle et al., 2021; Mahony et al., 2020; Sadovskaya et al., 2017).

Based on the variability of the 3′ genomic region encoding the PSP among C-type strains, eight different subtypes can be distinguished, each with associated unique structures (Ainsworth et al., 2014; Farenc et al., 2014; Mahony et al., 2020). For instance, the PSP of *L. cremoris* 3107 (subtype C_2) is composed of pentasaccharidic repeating units, whereas *L. cremoris* NZ9000 (subtype C_1) contains hexasaccharidic subunits (Ainsworth et al., 2014; Theodorou et al., 2019). By "swapping" the variable region encoding the PSP in these strains (the construction of an *L. cremoris* NZ9000 strain expressing the subtype C_2 CWPS) it was confirmed that the glycosyltransferases (GTs) encoded within this region are responsible for the distinct chemical structure (Ainsworth et al., 2014). Furthermore, by challenging this strain with different lactococcal phages, it was demonstrated that the 3107-infecting phages phiLC3 (named here as LC3) and TP901-1 recognise the PSP component of the lactococcal strain 3107 (Ainsworth et al., 2014). This is consistent with the high similarity observed in the C-terminal receptor-interacting domain of their respective RBPs (Blatny et al., 2004; Brøndsted et al., 2001) and the fact that antibodies raised against the RBP of LC3 neutralised TP901-1 infection (Mahony et al., 2017).

In addition to the CWPS, the cell surface of *L. lactis* and *L. cremoris* contains other glycopolymers, including peptidoglycan and lipoteichoic acids (LTAs) (Martínez et al., 2020). The biosynthesis of these components requires the coordinated activity of GTs, transporters and metabolic enzymes (Mistou et al., 2016). Additional decorations can be attached to such cell envelope-associated glycopolymers, contributing to increased biochemical and structural diversity. The extracytoplasmic addition of sugar decorations is commonly executed by so-called three-component glycosylation systems (TGSs) (Mann & Whitfield, 2016). Typically, this glycosylation process comprises three basic steps: (i) a membrane-anchored GT transfers sugar from a nucleotide diphosphate sugar donor to a lipid carrier (undecaprenyl phosphate [Und-P]) at the cytoplasmic face of the membrane; (ii) a flippase transports the glycosylated lipid intermediate across the membrane; and (iii) a polytopic integral membrane GT transfers the sugar from the lipid intermediate to the final acceptor molecule or substrate (Mann & Whitfield, 2016), which are usually glycopolymers (Mann & Whitfield, 2016; Rismondo et al., 2021). Recently, it has been proposed to rename TGS to multi-component transmembrane glycosylation systems as more than three proteins can be involved, as well as enzymes belonging to different protein families (Rismondo et al., 2021). In the lactococcal strain NZ9000, three distinct TGSs have been described to date, which participate in the glucosylation of the rhamnan and PSP polymers, and the galactosylation of LTA (Theodorou et al., 2020). It has been shown

that the glucosylation of the CWPS components can increase resistance to certain Skunavirus and P335 phages (Theodorou et al., 2020). TGSs have indeed been shown to play a role in phage-host interactions in other bacteria including *Listeria monocytogenes* (Spears et al., 2016; Sumrall et al., 2019), *Shigella flexneri* (Huan et al., 1997; Mavris et al., 1997) and *Salmonella enterica* (Kim & Ryu, 2012). Additionally, it has been reported that different TGSs encoded by prophages in *Salmonella* are contributing to the diversity of the O-antigen component of the lipopolysaccharide (Broadbent et al., 2010; Davies et al., 2013).

Following initial recognition and phage reversible adsorption to its host, irreversible adsorption occurs, being concomitant with DNA release into the bacterial cytoplasm (Dowah & Clokie, 2018). This irreversible event is poorly defined for phages that infect Gram-positive bacteria, including *Lactococcus* species. It has been reported that *Ceduovirus* reversibly adsorb to the lactococcal CWPS and subsequently to the membrane-associated protein YjaE (Millen & Romero, 2016; Stuer-Lauridsen et al., 2003) or PIP (phage infection protein), leading the phage genome delivery into the cytoplasm (Monteville et al., 1994; Valyasevi et al., 1991). In a similar manner, *Bacillus subtilis* phage SPP1, following its initial attachment to glycosylated teichoic acids present on the cell surface, irreversibly binds through its tail fibre to the ectodomain of a membrane protein, YueB, an interaction that triggers DNA release (São-José et al., 2006; Vinga et al., 2012).

It has previously been proposed that the P335 group phages LC3 and TP901-1 either utilise different DNA release trigger(s) or different DNA entry pathways through the characterization of three TP901-1-resistant derivatives of *L. cremoris* 3107 (Østergaard Breum et al., 2007). TP901-1 and LC3 were shown to be capable of adsorbing to these derivatives, while TP901-1 DNA release appeared to be blocked (in contrast to LC3) causing the observed phage resistance (Østergaard Breum et al., 2007). The adhesion devices of both phages, which include their RBPs, are morphologically distinct, likely allowing interactions with distinct triggers for DNA release. Five P335 phage subgroups have been established based on distinct adhesion device morphologies (Mahony et al., 2017). TP901-1 possesses a double-disc structure (Vegge et al., 2006) and belongs to subgroup II, while LC3, which exhibits a "stubby" tail tip region, is classified into subgroup III (Mahony et al., 2017). In the current study, through comparative genome analysis and complementation experiments, we demonstrate that two distinct GT-encoding genes from *L. cremoris* 3107 are required for TP901-1 DNA internalisation. These two genes are believed to form part of a novel TGS involved in the glucosylation of an, as yet, unknown cell envelope moiety, which acts as a trigger for TP901-1 DNA release.

EXPERIMENTAL PROCEDURES

Bacterial strains, growth conditions, phage preparations and plasmids

Strains, phages and plasmids employed in this study are listed in Table S1. *L. cremoris* and *L. lactis* strains were grown at 30°C in M17 broth/agar supplemented with 0.5% glucose (GM17) and, when required, with 5 $\mu g\,ml^{-1}$ chloramphenicol (Cm). Lactococcal phages were propagated in GM17 broth cultured with the host strain at an approximate OD_{600nm} of 0.2 and supplemented with 10 mM $CaCl_2$. TP901-1*erm* (Koch et al., 1997) was induced from *L. cremoris* NZ9000_TP901-1*erm* using 0.5 $\mu g\,ml^{-1}$ mitomycin C when the growing culture reached an OD_{600nm} of approximately 0.2 SM buffer (10 mM $CaCl_2$, 100 mM NaCl, 10 mM $MgSO_4$, 50 mM Tris–HCl at pH 7.5) was used as the diluent in all phage assays.

Genome sequencing of TP901-1-resistant mutants and comparative analysis

Lactococcus cremoris 3107 derivatives E119, E121 and E126 were sequenced using an Illumina sequencing platform performed by Macrogen Inc. and their genomic features were predicted as described previously for *L. cremoris* 3107 (Erazo Garzon et al., 2019). SNP analysis was performed using the *L. cremoris* 3107 genomic sequence as a reference and comparing this to the genome sequences of its phage-resistant derivatives E119, E121 and E126 employing Bowtie2 alignment (Langmead et al., 2009), followed by the application of SAMtools (Li et al., 2009) to extract base variants. The sequence integrity of randomly selected SNPs was confirmed by PCR amplification and Sanger sequencing of the relevant genomic regions.

In silico analysis of mutated *L. cremoris* 3107 genes

In silico analysis of *L. cremoris* 3107 genes and encoded products was performed using the online bioinformatics software tools BLASTN and BLASTP (Altschul et al., 1990); TMHMM v2.0 (Sonnhammer et al., 1998) to identify predicted transmembrane regions and HHpred (Söding et al., 2005) to predict protein function based on structural homology. The complementing genes (as identified in the current work) were further analysed using Artemis [v18] (Rutherford et al., 2000) to assess their genomic context. This tool was also used to create Figure S1. Clustal Omega was used for the protein sequence analysis (Sievers et al., 2011), while Jalview 2.11.2.4 was used for visualisation of the alignments (Waterhouse et al., 2009).

Construction of pNZ44 derivatives

Primers (listed in Table S2) were designed and generated (Eurofins Genomics, Germany) to amplify candidate genes from *L. cremoris* 3107 that may complement TP901-1-resistant mutants based on the SNP analysis performed. In addition, the following lactococcal genes were amplified using suitable primers (Table S2): *yieH* from *L. lactis* strain IL1403; $csdC_{3107}$ and $csdG_{3107}$ from *L. cremoris* 3107; $csdH_{NZ9000}$, as well as $csdC_{NZ9000}$ and $csdD_{NZ9000}$ from *L. cremoris* NZ9000. The amplicons and plasmid pNZ44 (Cm^r; 3396 bp) were restricted and ligated using appropriate enzymes (Table S2), according to standard procedures (Sambrook et al., 1989). Ligated constructs were introduced into *E. coli* EC101 competent cells prepared using a previously described protocol (Sambrook & Russell, 2006). *E. coli* EC101 Cm^r transformants were selected using LB agar plates supplemented with 10 $\mu g\,ml^{-1}$ Cm. Recombinant plasmids were identified by colony PCR using the primer pNZ44_F and a reverse primer specific for the cloned DNA fragment, e.g. *csdG*_R (Table S2). Sequence integrity of the cloned DNA fragments was validated by Sanger sequencing (MWG Eurofins Genomics, Germany). Such verified recombinant plasmids were then extracted using a Pure Link DNA Purification kit (ThermoFisher Scientific) and individually introduced either by electrotransformation into the corresponding *L. cremoris* mutant. To confirm the presence of the desired constructs, PCR reactions were performed on the Cm^r isolates. Furthermore, plasmids pNZ$csdB_{NZ9000}$, pNZ$csdF_{NZ9000}$ (Theodorou et al., 2020) and pNZ$csdD_{NZ900}$ were individually introduced into *L. cremoris* E119 and E126, while lactococcal E121 strain was transformed with plasmids pNZ$csdA_{NZ9000}$, pNZ$csdE_{NZ9000}$ (Theodorou et al., 2020) and pNZ$csdC_{NZ9000}$.

Electrotransformation of *L. cremoris*

Competent cells of *L. cremoris* 3107 and its derivative strains were prepared and transformed following a previously described procedure (Landete et al., 2014) with the following modifications: 50 ml of GM17 broth supplemented with 0.5 M sucrose and 0.6%–1.0% glycine was inoculated with 6% fresh overnight culture. This culture was incubated at 30°C until an approximate OD_{600nm} of 0.6–0.8 was reached. Cells were harvested and the pellet was washed twice in an ice-cold wash solution (0.5 M sucrose and 10% glycerol). Finally, the cell pellet was re-suspended in 500 μl wash solution and aliquoted. 45 μl of competent cell suspension was mixed with 5 μl of the corresponding plasmid DNA and electroporated with an Electro Cell Manipulator® Precision PulseTM (BTX®Harvard Apparatus) at 2 kV, 200 Ω and 25 μF in an ice-cold 0.2 cm electroporation cuvette (Cell Projects Distributor). Cells were recovered in 950 μl ice-cold GM17 broth supplemented with 20 mM $MgCl_2$ and 2 mM $CaCl_2$ and this mixture was incubated at 30°C for 2.5 h. Bacteria were then plated on GM17 agar supplemented with 2.5 mM $CaCl_2$, 2.5 mM $MgCl_2$ and 2.5 $\mu g\,ml^{-1}$ Cm and incubated anaerobically at 30°C for 48 h.

Phage assays

To determine the EOP of a particular phage on a specific host, solid and semi-solid agar was prepared using GM17 broth supplemented with 1.0% or 0.4% bacteriological agar, respectively, plus 10 mM $CaCl_2$ and employed according to a previously described method (Lillehaug, 1997). Lawns of the corresponding indicator strain were plated with progressive 10-fold phage dilutions that had been prepared in SM buffer. The EOP was determined as the ratio of the titre obtained from the test strain to that of the control strain.

Reversible and irreversible adsorption assays were carried out as previously reported (Østergaard Breum et al., 2007) with the following adjustments. 10 ml of GM17 broth was inoculated with 2% of the appropriate strain until an OD_{600nm} of approximately 0.5 was reached. The culture was supplemented with 10 mM $CaCl_2$, following this 500 μl of the mixture was added to an equal volume of phage lysate (at a multiplicity of infection [MOI] of 0.01) in GM17, and the mixture was incubated at 30°C for 10 min. As a control, 500 μl of GM17 broth supplemented with 10 mM $CaCl_2$ was mixed with 500 μl of the phage lysate and incubated at 30°C for 10 min. Following incubation, irreversible adsorption was determined by diluting samples 1:100 in ice-cold quarter strength Ringer's solution (Sigma) supplemented with 1 M NaCl. Cell-free supernatants were immediately prepared by centrifugation of the samples at 6000 *g* for 1 min and phage numbers in the supernatants were determined by standard plaque assays using *L. cremoris* 3107 as the indicator strain. Following incubation, reversible adsorption was also determined, samples were centrifuged at 6000 *g* for 1 min to pellet cells and the supernatant was diluted 1:100 in quarter strength Ringer's solution supplemented with 1 M NaCl. Adsorption was measured as a percentage of total phages attached to the host when compared with control phage titre (which lacks bacterial cells) using the following formula: [(Control phage titre – Free phage titre in supernatant)/Control phage titre] × 100.

Lysogenization assays were performed as previously described (Østergaard Breum et al., 2007) with the following modifications. Briefly, 10 ml GM17 broth was inoculated with 2% of the required strain until an approximate OD_{600nm} of 0.2 was reached. 500 μl of the

culture was then infected with 500 µl of TP901-1*erm* diluted in GM17 at an MOI of 0.5 and the mixture was incubated at 30°C for 1 h to allow one round of infection to occur. Following incubation, cells were diluted as necessary and plated on GM17 agar supplemented with 1 µg ml^{-1} erythromycin. Lysogens were observed following anaerobic incubation for 48 h at 30°C. The frequency of lysogenization was determined by calculating the total number of obtained erythromycin-resistant lysogens per ml, divided by the total colony forming units per ml (CFU ml^{-1}) obtained.

Quantification of TP901-1 DNA released inside lactococcal cells by qPCR was carried out as described in (Fernandes et al., 2016) with some minor modifications. 10 ml of GM17 broth was inoculated with 2% of the appropriate strain until an OD_{600nm} of approximately 0.5 was reached. Then, 2 ml of the culture supplemented with 10 mM $CaCl_2$ was mixed with an equal volume of phage lysate at an MOI of 0.01 in GM17. The mixture was incubated at 30°C for 10 min. Control samples that only contained TP901-1 phage or *L. cremoris* 3107 cells were incubated at the same time. Then, all samples were incubated with NaCl 1 M and EDTA 50 mM at 65°C for 15 min, followed by incubation with Benzonase® Nuclease (Sigma) in the presence of 100 mM $MgCl_2$. After 1 h at 37°C, cells were washed twice to remove the nuclease and the total DNA was extracted using Invitrogen Purelink genomic DNA extraction kit according to the manufacturer's instructions. For each strain, three biological replicates were used.

Quantitative PCRs were performed using the LightCycler® 480 SYBR Green I Master (Roche) and a LightCycler® 480 Instrument (Roche). Relative quantification of TP901-1 DNA was performed using the comparative C_t method (Schmittgen & Livak, 2008). The reaction mixtures (15 µl) contained 0.05 µg of genomic DNA and 500 nM of each primer. The initial denaturation step was performed at 95°C for 5 min. It was followed by 40 cycles that included: (i) denaturation at 95°C for 10 s; (ii) annealing at 58°C for 20 s; and (iii) extension at 72°C for 30 s. TP901-1 *ssb* and *rep* genes (with locus tags *TP901-1p12* and *TP901-1p13*, respectively), involved in its replication (Østergaard et al., 2001), were used as targets. The amount of TP901-1 DNA internalised was determined as a relative level to an internal control, a host chromosomal gene, corresponding to locus tag *L3107_0192*, and involved in the synthesis of the PSP (Ainsworth et al., 2014). The threshold cycle values (C_T) of *ssb* and *rep* and the control gene *L3107_0192* were used to calculate $2^{-\Delta CT}$, where $\Delta C_T = C_T$ gene of interest-C_T internal control. A Student t-test was performed on the $2^{-\Delta CT}$ values to determine whether the difference between two strains was significant. The fold change in the amount of TP901-1 DNA was obtained by dividing the $2^{-\Delta CT}$ value of each derivative strain by the $2^{-\Delta CT}$ value of *L. cremoris* 3107.

CWPS and LTA extraction, purification and analysis

Bacteria from exponentially growing cultures were collected by centrifugation at 1900 *g* for 15 min at 4°C in a Sorvall RC6+ centrifuge (ThermoFisher Scientific), chilled on ice and heat-killed. CWPS was extracted from bacterial cell walls by 48% HF treatment (4°C, 48 h) followed by rhamnan and PSP oligosaccharide separation by SEC-HPLC, as described previously (Sadovskaya et al., 2017). Monosaccharide composition of purified fractions was determined following trifluoroacetic acid hydrolysis by high-performance anion exchange chromatography coupled with pulse-amperometric detection (HPAEC-PAD) (ICS5000 system; ThermoFisher Scientific). Purified fractions were analysed by MALDI-TOF MS with a Voyager-DE STR mass spectrometer (Applied Biosystems) with 2,5-dihydroxy-benzoic acid matrix with an UltrafleXtreme instrument (Bruker Daltonics; localised at Université Paris-Saclay, CEA, INRAE, Médicaments et Technologies pour la Santé, MetaboHUB, Gif-sur-Yvette, France).

For LTA isolation and analysis, *L. cremoris* 3107, its mutant derivative E126 and *L. lactis* IL403 were grown overnight in 4 L of GM17, after which cells were harvested by centrifugation at 1900 *g* for 15 min at 4°C, and washed twice with ice-cold deionized water. LTA was extracted from these bacterial cells with hot aqueous phenol as previously described (Sijtsma et al., 1990). Crude extracts (5 mg) were subjected to composition and methylation analyses by gas chromatography and gas chromatography–mass spectrometry after treatment with 48% HF (4°C, 24 h), acid hydrolysis and conversion into alditol acetates, as described previously (Chapot-Chartier et al., 2010). For the detection of glycerol, hydrolysed samples were acetylated.

RESULTS

The *csdG$_{3107}$* and *csdC$_{3107}$* genes are required for TP901-1 infection

Chemical mutagenesis with ethyl methanesulfonate (EMS) of *L. cremoris* 3107, a strain sensitive to P335 group phages TP901-1 and LC3, had previously resulted in the isolation of three distinct TP901-1-resistant (but LC3-sensitive) mutants, designated E119, E121 and E126 (Østergaard Breum et al., 2007). Adsorption of TP901-1 to these mutants was unaffected suggesting that a step beyond initial host recognition and attachment is impaired (Østergaard Breum et al., 2007). The genomes of *L. cremoris* 3107 derivatives E119, E121 and E126 were sequenced to identify the gene(s) that is (are) responsible for the observed phage resistance phenotype. As expected, their genomes exhibit near identical characteristics to

the parent strain (Erazo Garzon et al., 2019) and carry an identical plasmid content. Comparative genomic analysis did not reveal any major deletion or insertion events, and therefore, a single nucleotide polymorphism (SNP) analysis of the chromosome and plamids was undertaken to identify point mutations that may have caused the observed phage resistance phenotype. This resulted in the identification of 36, 16 and 21 SNPs on the genomes of E119, E121 and E126, respectively (Table S3 and Figure S1). Most of the identified SNPs were shown to be transition mutations, perhaps as expected since EMS is known to induce such substitutions (Sega, 1984). Seven of these SNPs occurred in more than one of the mutant genomes, and some genes contained more than one mutation in a given genome. A total of 31, 16 and 17 genes were mutated in the genomes of strains E119, E121 and E126, respectively, with five of these genes mutated in both E119 and E126 (therefore a total of 59 putative genes were identified that had been mutated in E119, E121 and/or E126). Previous studies have demonstrated that Gram-positive-infecting phages utilise membrane-bound receptors for their infection process (Derkx et al., 2014; Monteville et al., 1994; São-José et al., 2006; Stuer-Lauridsen et al., 2003; Valyasevi et al., 1991). Consequently, the predicted products encoded by *L. cremoris* 3107 genes that were carrying SNPs in the mutants were analysed using the servers TMHMM v2.0 (Sonnhammer et al., 1998) to identify predicted transmembrane regions and HHpred (Söding et al., 2005) to investigate its homology and predicted structure. Those mutated genes predicted to encode a membrane-associated protein were amplified from *L. cremoris* 3107 and cloned in plasmid pNZ44 to perform a phenotypic complementation approach. Additionally, other plausible candidates were cloned. A total of 33 different recombinant plasmids were constructed (Table S4). Of these, 14, 16 and 5 recombinant plasmids (as two of the cloned genes were mutated in E119 and E126) were individually introduced into strains E119, E121 and E126, respectively, using electroporation. The resulting 35 strains were tested for the restoration of sensitivity to TP901-1 by plaque assay. A construct containing the gene corresponding to locus tag *L3107_1442* complemented strains E119 and E126, while a plasmid harbouring the gene with locus tag *L3107_1875* complemented E121. These *L3107_1442* and *L3107_1875* genes were, based on comparative sequence analysis described below, designated as $csdG_{3107}$ and $csdC_{3107}$, respectively (Figure 1 and Table S3). Analysis of TP901-1 sensitivity restoration by phage assays is described in detail in the following sections.

The products of $csdG_{3107}$ and $csdC_{3107}$ are predicted to form part of a TGS system in *L. cremoris* 3107

Lactococcus cremoris 3107 derivatives E119 and E126 each carry a distinct mutation that introduces a premature stop codon in $csdG_{3107}$ (Figure 1A), which is presumed to render a non-functional $CsdG_{3107}$ product in these mutants (463 and 161 amino acids [AA] products, respectively, compared with the 891 AA expected product of the parent strain). Full-length $CsdG_{3107}$ is predicted to be an integral membrane protein with 14 transmembrane helices (TMHs) and a long extracellular loop between the 13th and 14th TMHs. HHpred modelling revealed that the N-terminal region of $CsdG_{3107}$ (AA 110 to 260) has structural similarity to AftD, an arabinofuranosyltransferase of mycobacteria (99.6% probability; E-value $8.5e^{-13}$, structure

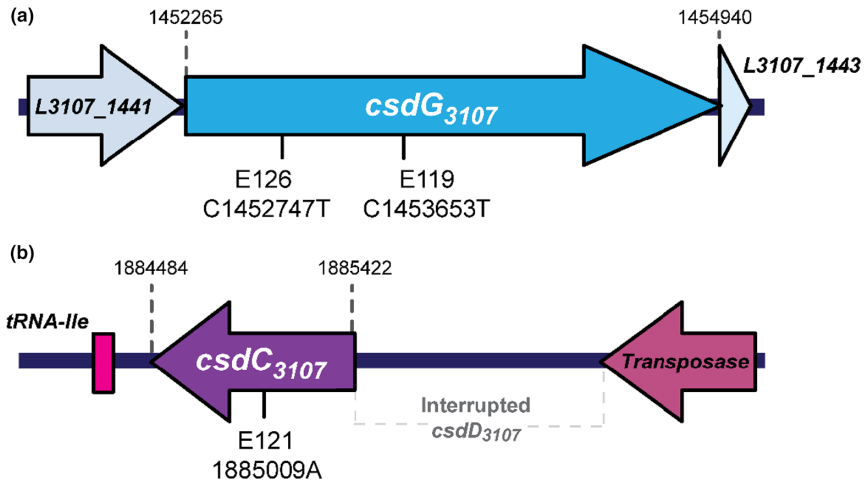

FIGURE 1 Schematic representation of the genomic region containing $csdG_{3107}$ (*L3107_1442*), encoding a 891 AA product (A); and $csdC_{3107}$ (*L3107_1875*), encoding a 312 AA protein (B) in *L. cremoris* 3107. The mutations found in each strain resistant to TP901-1 are indicated. E119 and E126 substitutions lead to the incorporation of a stop codon in $csdG_{3107}$ (expected products of 463 and 161 AA, respectively), whereas E121 insertion causes a translational frameshift that generates a pre-mature stop codon in $csdC_{3107}$ (143 AA expected product).

6W98_A in protein data bank [PDB]) (Tan et al., 2020). Specifically, it has similarity to AftD's conserved GT-C fold (Tan et al., 2020), which is one of three major folds that GTs adopt (Taujale et al., 2021). GT-C enzymes typically contain 8–13 TMHs and a long catalytic extracellular loop with a conserved or modified DXD motif (Lairson et al., 2008; Liu & Mushegian, 2003). Thus, $CsdG_{3107}$ characteristics are compatible with being a GT-C enzyme, although it does not appear to contain a DXD motif. *In silico* analysis using BLASTN (Altschul et al., 1990) was performed to analyse the presence of the $csdG_{3107}$ gene in other lactococcal strains, revealing that it is present in 25 out of 71 *L. cremoris* genomes sequenced to date, with a sequence identity exceeding 98%. $csdG_{3107}$ homologues were also shown to be present in 46 out of 229 publicly available *L. lactis* genomes, though with a slightly reduced sequence identity of 84%. By contrast, no obvious homologues were found in other species. The $csdG_{3107}$ gene is flanked on its 5′ side by the *L3107_1441* gene (Figure 1A), which is predicted to encode a galactose-1-phosphate-uridylyltransferase (GalT) and on its 3′ side by the *L3107_1443* gene (Figure 1A), encoding a putative protein of unknown function. Both *L3107_1441* and *L3107_1443* are conserved in all *L. lactis* and *cremoris* genomes where $csdG_{3107}$ is present.

The TP901-1-resistant derivative E121 carries a nucleotide insertion (A) within $csdC_{3107}$ (Figure 1B), predicted to encode a GT with a GT-A fold. This insertion causes a translational frameshift that generates a pre-mature stop codon, resulting in a predicted product of 143 AA instead of 312. This gene is a homologue (88% full-length nucleotide sequence identity) of the $csdC_{NZ9000}$ gene from *L. cremoris* NZ9000 (Theodorou et al., 2020). Their products (93% AA identity) (Figure S2A), are predicted to contain the DXD catalytic motif of GT-A fold enzymes and two TMHs at its C-terminus. $CsdC_{NZ9000}$ is part of a TGS involved in the glucosylation of the PSP component of the CWPS in NZ9000 (Table 1) and is believed to catalyse the transfer of glucose (Glc) from uracil-diphosphate glucose (UDP-Glc) to Und-P (first step of the glucosylation process). The second GT-encoding gene of this TGS, $csdD_{NZ9000}$, is located immediately upstream of the coding sequence of the $csdC_{NZ9000}$ gene (Theodorou et al., 2020). $csdC_{NZ9000}$ homologues were found to be present in 13 out of the 33 lactococcal genomes analysed (Theodorou et al., 2020). In *L. lactis* 3107, although there is an adjacent $csdD_{3107}$ homologue, it is disrupted by a transposon element (Figure 1B), as previously reported, which indicates that the involvement of $csdC_{3107}$ in TP901-1 infection is not through PSP glucosylation (Theodorou et al., 2020). Interestingly, the genomic region containing $csdC_{3107}$ differs from the NZ9000 genomic region surrounding the $csdCD_{NZ9000}$ gene pair. Since GTs involved in the last step of TGS-mediated glycosylation are predicted to adopt a GT-C fold (Mann & Whitfield, 2016) and $CsdG_{3107}$ *in silico* analysis is consistent with this (see above), it is proposed that $CsdC_{3107}$ and $CsdG_{3107}$ form part of a TGS in *L. cremoris* 3107. Although TGS-encoding genes are commonly clustered in their corresponding genomes, it is known that they can be dispersed along the genome (Rismondo et al., 2021).

TABLE 1 TGS described in *L. cremoris* NZ9000 (Theodorou et al., 2020)

TGS from *L. cremoris* NZ9000	Function
$CsdAB_{NZ9000}$	Glucosylation of rhamnan
$CsdCD_{NZ9000}$	Glucosylation of PSP
$CsdEF_{NZ9000}$	Galactosylation of LTA

TP901-1 sensitivity restoration by $csdG_{3107}$ and $csdC_{3107}$

To assess the restoration level of phage sensitivity in *L. cremoris* 3107 mutants harbouring their corresponding complementing plasmid, quantitative plaque assays were performed. The efficiency of plaquing (EOP) of TP901-1 and LC3 was determined on *L. cremoris* 3107, E119 and E126 harbouring pNZ$csdG_{3107}$, as well as E121 carrying pNZ$csdC_{3107}$. As a control, the EOP of the tested phages was also determined in these strains harbouring the empty vector pNZ44 and on 3107 carrying pNZ$csdG_{3107}$ or pNZ$csdC_{3107}$. As expected, TP901-1 was not able to form visible plaques on the mutant strains, nor on the mutants harbouring pNZ44, yielding an EOP of $\leq 10^{-8}$ (Table 2). However, in the presence of their corresponding complementing plasmid, TP901-1 was able to form plaques on these three mutants with approximately the same EOP as on *L. cremoris* 3107, as well as on 3107 carrying such plasmids (Table 2). To further confirm that the presence of the pNZ$csdG_{3107}$ or pNZ$csdC_{3107}$ constructs caused reversion of the TP901-1 phage resistance phenotype, the complemented mutants were passaged several times in the absence of chloramphenicol to cure their complementing plasmids. As anticipated, TP901-1 was incapable of forming visible plaques on any of the obtained plasmid-free mutant strains, exhibiting an EOP of $\leq 10^{-8}$ (Table 2). Phage LC3 formed visible plaques on all strains, with the same efficiency as on *L. cremoris* 3107 (Table 2).

Adsorption assays were performed to assess whether the complementation of the mutant strains affected reversible and/or irreversible binding of TP901-1 (Table 3). TP901-1 adsorbs reversibly to *L. cremoris* 3107 and its derivatives with high efficiency, but its irreversible adsorption to the mutants with or without the

TABLE 2 Restoration of phage sensitivity phenotype of *L. cremoris* 3107 mutants

L. cremoris strain	EOP of TP901-1	EOP of LC3
3107	1	1
3107_pNZ44	0.76 ± 0.12	0.70 ± 0.07
3107_pNZ*csdG*$_{3107}$	0.75 ± 0.12	0.66 ± 0.06
3107_pNZ*csdC*$_{3107}$	0.82 ± 0.13	0.87 ± 0.22
E119	≤10^{-8}	0.71 ± 0.10
E119_pNZ44	≤10^{-8}	0.71 ± 0.08
E119_pNZ*csdG*$_{3107}$	0.86 ± 0.01	0.76 ± 0.07
E119_pNZ*csdG*$_{3107}$ cured	≤10^{-8}	0.78 ± 0.08
E126	≤10^{-8}	0.71 ± 0.09
E126_pNZ44	≤10^{-8}	0.71 ± 0.06
E126_pNZ*csdG*$_{3107}$	0.86 ± 0.01	0.77 ± 0.07
E126_pNZ*csdG*$_{3107}$ cured	≤10^{-8}	0.75 ± 0.04
E121	≤10^{-8}	0.91 ± 0.15
E121_pNZ44	≤10^{-8}	0.89 ± 0.03
E121_pNZ*csdC*$_{3107}$	0.51 ± 0.21	1.02 ± 0.26
E121_pNZ*csdC*$_{3107}$ cured	≤10^{-8}	1.05 ± 0.33

TABLE 3 Adsorption (%) of phage TP901-1 to *L. cremoris* 3107 and its derivatives

	Adsorption of TP901-1 (%)	
L. cremoris strain	Reversible	Irreversible
3107	97.8 ± 0.1	97.5 ± 0.3
3107_pNZ44	97.7 ± 0.2	97.3 ± 0.1
3107_pNZ*csdG*$_{3107}$	94.0 ± 0.6	93.1 ± 0.9
3107_pNZ*csdC*$_{3107}$	95.0 ± 2.9	78.6 ± 2.6
E119	94.7 ± 0.4	75.2 ± 1.5
E119_pNZ44	91.3 ± 0.8	73.2 ± 0.8
E119_pNZ*csdG*$_{3107}$	94.1 ± 0.8	83.3 ± 0.2
E126	95.7 ± 0.7	68.2 ± 0.8
E126_pNZ44	90.3 ± 0.5	66.6 ± 1.7
E126_pNZ*csdG*$_{3107}$	95.7 ± 0.1	82.4 ± 1.1
E121	95.6 ± 2.7	66.0 ± 10.3
E121_pNZ44	94.8 ± 0.8	71.0 ± 4.0
E121_pNZ*csdC*$_{3107}$	93.8 ± 3.9	81.5 ± 0.8

empty vector pNZ44 is significantly reduced (Table 3). When *L. cremoris* strains E119, E126 and E121 harbour their corresponding complementing plasmid, an 8.1%; 14.5%; and 15.5% improvement in irreversible adsorption by TP901-1 was observed, respectively. These differences were statistically significant (p-value <0.05; Student t-test) in all three cases. These findings corroborate the notion that CsdG$_{3107}$ and CsdC$_{3107}$ are involved in the irreversible adsorption step associated with TP901-1 DNA release.

Lysogenisation reflects the capacity of a phage to adsorb to its host and deliver its DNA followed by integration in the host chromosome (Stockdale et al., 2015). Considering that the reversible adsorption of TP901-1 was not affected in the mutants, lysogenization frequency was measured using TP901-1*erm*, a derivative of phage TP901-1 harbouring an erythromycin resistance marker (Koch et al., 1997). Lysogenization frequencies of the three mutant strains were lower than that of the 3107 strain (approximately ~10^{-6} vs. 10^{-3}, Table S5). Interestingly, an approximate 100-fold increase in the frequency of lysogeny was observed for E119 and E126 derivatives harbouring pNZ*csdG*$_{3107}$ as compared to E119 and E126 (Table S5). Similarly, pNZ*csdC*$_{3107}$ almost completely restored the frequency of lysogeny in E121 compared with 3107. Mutant strains from which the complementing plasmid was cured and mutants harbouring the empty pNZ44 vector exhibited the same frequency of lysogenization (10^{-6}, Table S5) as the same strains without this plasmid, indicating that pNZ44 has no impact on internalisation or lysogeny.

Furthermore, to investigate whether the complementation of the mutant strains had an effect on TP901-1 DNA entry, a relative quantification of TP901-1 DNA internalised in *L. cremoris* 3107 and its mutant derivatives was performed. TP901-1 DNA was detected by qPCR using a previously described method (Fernandes et al., 2016) and analysed using the comparative Ct method (Livak & Schmittgen, 2001). Using this approach, the amount of phage DNA internalised in each strain was compared with *L. cremoris* 3107. TP901-1 *ssb* and *rep* genes (Østergaard et al., 2001) were targeted for this qPCR approach and relativized to a host chromosomal gene, *L3107_0192*. The amount of TP901-1 DNA internalised in the resistant mutants (with or without the empty vector), compared with *L. cremoris* 3107 was significantly lower (Figure 2 and Table S6), consistent with the observed absence of empty TP901-1 capsids when adsorbed to E121 and E126 (Østergaard Breum et al., 2007). The levels of TP901-1 DNA significantly increased when they were complemented (Figure 2). Phage replication was considered negligible in these experiments, as the incubation time of TP901-1 with the lactococcal cells was only 10 min, followed by an incubation step at 65°C for 15 min. These results clearly indicate that *L. cremoris* mutants E119, E121 and E126 do not allow DNA release by TP901-1 and that this deficiency can be restored by the introduction of a plasmid-borne copy of either *csdC*$_{3107}$ or *csdG*$_{3107}$. In some cases, no full restoration of the TP901-1 sensitivity was achieved and this may have been due to differential expression (compared with the wild-type situation) of the plasmid-borne copy of the complementing gene or to the fact that the mutants carry additional mutations, which may affect growth and/or phage infection.

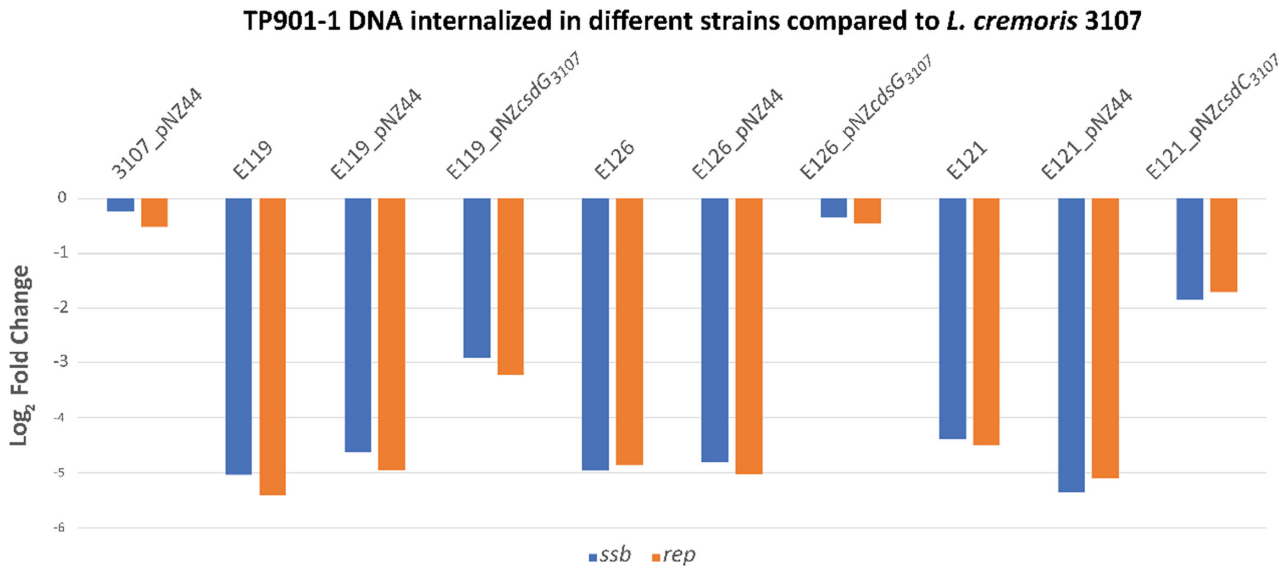

FIGURE 2 Log_2 fold change in the amount of TP901-1 DNA internalised in different strains compared with *L. cremoris* 3107, determined by qPCR. TP901-1 *ssb* and *rep* genes (blue and orange bars, respectively) were detected and expressed relative to an internal control, the chromosomal host gene *L3107_0192*.

Restoration of TP901-1 sensitivity phenotype using homologous or functionally analogous GTs

It has been established in *L. cremoris* NZ9000 that the function of $CsdC_{NZ9000}$ (synthesis of an Und-P-Glc intermediate) can be substituted by a functionally equivalent GT, $CsdA_{NZ9000}$, but not by the GT $CsdE_{NZ9000}$, which is presumed to transfer galactose to Und-P (Table 1) (Theodorou et al., 2020). $CsdA_{NZ9000}$, along with $CsdB_{NZ9000}$, form a TGS, which participates in the glucosylation of the rhamnan component of the CWPS, whereas the TGS $CsdEF_{NZ9000}$ is implicated in the galactosylation of LTA (Table 1). Only $CsdEF_{NZ9000}$ has a homologous system in *L. cremoris* 3107 (Theodorou et al., 2020). Interestingly, a BLASTP analysis using query $CsdC_{3107}$ against the *L. cremoris* NZ9000 proteome, revealed the existence of an additional uncharacterized GT, encoded by a gene with locus tag *LLNZ_00570*, that shares 71% AA sequence identity (Figure S2A). This putative GT, designated here as $CsdH_{NZ9000}$, is predicted to adopt a GT-A fold and to contain two TMHs at its C-terminal region. HHpred modelling revealed that $CsdH_{NZ9000}$ has structural similarity with an uncharacterized GT, sll0501, from *Synechocystis* spp. (structure 5EKE_B in PDB database, 100% probability and E-value of $1.1e^{-33}$). Therefore, it was investigated whether $CsdA_{NZ9000}$, $CsdC_{NZ9000}$, $CsdH_{NZ9000}$ or $CsdE_{NZ9000}$ are capable of restoring phage sensitivity in E121, by complementing the disabled function of $CsdC_{3107}$ in this strain. To this end, plasmids pNZ*csdA*$_{NZ9000}$, pNZ*csdE*$_{NZ9000}$ (Theodorou et al., 2020), pNZ*csdC*$_{NZ9000}$ and pNZ*csdH*$_{NZ9000}$ were introduced in lactococcal strain E121 and plaque assays were performed. LC3 and TP901-1 were able to infect E121 harbouring pNZ*csdA*$_{NZ9000}$, pNZ*csdC*$_{NZ9000}$ and pNZ*csdH*$_{NZ9000}$ with a similar EOP as on 3107 (Table 4). In addition, TP901-1 was incapable of forming visible plaques on a pNZ*csdH*$_{NZ9000}$-cured E121 strain. Thus, it is presumed that, similar to what

TABLE 4 Effects of the expression of different GTs on the infectivity of TP901-1 and LC3

L. Cremoris strain	EOP of TP901-1	EOP of LC3
3107	1	1
E121[a]	$\leq 10^{-8}$	0.91 ± 0.15
E121_pNZ*csdC*$_{NZ9000}$	0.54 ± 0.22	0.87 ± 0.21
E121_pNZ*csdA*$_{NZ9000}$	0.76 ± 0.22	0.86 ± 0.10
E121_pNZ*csdE*$_{NZ9000}$	$\leq 10^{-8}$	0.89 ± 0.35
E121_pNZ*csdH*$_{NZ9000}$	0.63 ± 0.26	0.82 ± 0.17
E121_pNZ*csdH*$_{NZ9000}$ cured	$\leq 10^{-8}$	1.04 ± 0.17
E119[a]	$\leq 10^{-8}$	0.71 ± 0.10
E119_pNZ*csdB*$_{NZ9000}$	$\leq 10^{-8}$	0.87 ± 0.24
E119_pNZ*csdD*$_{NZ9000}$	$\leq 10^{-8}$	1.11 ± 0.46
E119_ pNZ*csdF*$_{NZ9000}$	$\leq 10^{-8}$	0.74 ± 0.01
E119_pNZ*yieH*$_{IL1403}$	0.85 ± 0.01	0.75 ± 0.06
E119_pNZ*yieH*$_{IL1403}$ cured	$\leq 10^{-8}$	0.76 ± 0.02
E126[a]	$\leq 10^{-8}$	0.71 ± 0.09
E126_pNZ*csdB*$_{NZ9000}$	$\leq 10^{-8}$	0.62 ± 0.21
E126_pNZ*csdD*$_{NZ9000}$	$\leq 10^{-8}$	0.86 ± 0.23
E126_pNZ*csdF*$_{NZ9000}$	$\leq 10^{-8}$	0.66 ± 0.13
E126_pNZ*yieH*$_{IL1403}$	0.85 ± 0.01	0.75 ± 0.04
E126_pNZ*yieH*$_{IL1403}$ cured	$\leq 10^{-8}$	0.78 ± 0.10

[a]These values appeared in Table 2 but are included in this table again to facilitate the comparison between strains.

was previously shown for $CsdC_{NZ9000}$ and $CsdA_{NZ9000}$ (Theodorou et al., 2020), $CsdC_{3107}$ and $CsdH_{NZ9000}$ possess an Und-P-Glc synthase activity. Conversely and expectedly, the plasmid pNZ*csdE*$_{NZ9000}$ (specifying an Und-P-Gal synthase activity) had no effect on the infection of E121 by TP901-1 (Table 4). To further investigate the role of *L. cremoris* NZ9000 TGSs in TP901-1 infection, pNZ44 derivatives harbouring the polytopic GTs $CsdB_{NZ9000}$, $CsdD_{NZ9000}$ and $CsdF_{NZ9000}$ (see Tables 1, S1 and Figure S2B) were introduced in E119 and E126. Neither $CsdB_{NZ9000}$, $CsdD_{NZ9000}$ (both absent in 3107) nor $CsdF_{NZ9000}$ restored TP901-1 sensitivity on these mutants (Table 4). This finding indicates that glucosylation of the rhamnan or the PSP and galactosylation of LTA are not involved in TP901-1 DNA release.

A similar observation was made for a homologue of $CsdG_{3107}$, $YieH_{IL1403}$ (91% AA identity, Figure S3), identified on the *L. lactis* IL1403 genome. The *yieH*$_{IL1403}$ gene was cloned into pNZ44 and introduced into *L. cremoris* 3107 mutants E119 and E126. Plaque assays showed that TP901-1 was able to form plaques on E119 and E126 harbouring pNZ*yieH*$_{IL1403}$ with the same EOP as on *L. cremoris* 3107 but incapable of forming visible plaques on cured mutant strains (Table 4). Therefore, the expression of *yieH*$_{IL1403}$ in E119 and E126 restores their TP901-1 sensitivity. As expected, LC3 was shown to infect all strains with the same efficiency.

$CsdG_{3107}$ is not involved in glycosylation of CWPS components nor the teichoic acid component of *L. cremoris* 3107

To assess whether *csdG*$_{3107}$ and *csdC*$_{3107}$ are implicated in CWPS glycosylation, the rhamnan and PSP components from *L. cremoris* 3107, E119, E121 and E126 mutants, as well as 3107 carrying pNZ*csdG*$_{3107}$, were extracted by hydrofluoric acid (HF) treatment and separated by size exclusion chromatography (SEC) with a high-performance liquid chromatography (HPLC) system (Figures 3A and S4). The purified rhamnan and PSP fractions of 3107 and E126 were analysed for their monosaccharide composition and by matrix-assisted laser desorption ionisation-time of flight mass spectrometry (MALDI-TOF MS) according to previously described protocols (Sadovskaya et al., 2017; Theodorou et al., 2020). No significant differences were detected at the level of their composition or their MS spectra between the different strains. Monosaccharide composition of both rhamnan and PSP from E126 failed to reveal any substantial increase in Glc or other monosaccharide relatively to the other constituents (Figure 3B,C). Although some variation was observed between the individual extraction attempts, the composition of these extracted components exhibited no variation. These results, therefore, indicate that neither the PSP nor the rhamnan components of CWPS of the strains were modified by glucosylation or the addition of an extra monosaccharide in any obvious manner.

Lipoteichoic acids analysis of *L. lactis* IL1403 has previously shown that the polyglycerol-phosphate chain of LTA is substituted with single α-galactose residues (Kramer et al., 2008; Vinogradov, Sadovskaya, Courtin, et al., 2018). To investigate whether $CsdG_{3107}$ is involved in the glycosylation of this cell envelope component, LTA extracts from *L. cremoris* 3107, its mutant E126 and *L. lactis* IL1403 (as a positive control) were analysed. As expected, IL1403 contained terminal galactose (t-Gal) in all preparations, whereas t-Gal was absent in LTA preparations from both 3107 and E126 (Figure 4). The $CsdEF_{3107}$ TGS is therefore not functional in *L. cremoris* 3107, most likely because the putative promoter region is disrupted by the presence of a putative transposase-encoding gene. Nonetheless, teichoic acid glucosylation was undetectable under the conditions tested, indicating that $CsdG_{3107}$ is not involved in glycosylation of the polyglycerol-phosphate chain of LTA in *L. cremoris* 3107.

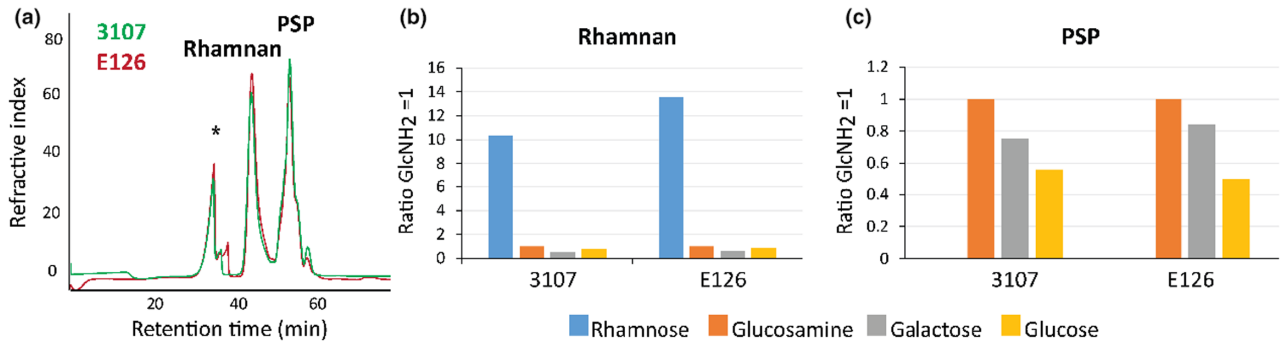

FIGURE 3 (A) SEC-HPLC purification of rhamnan and PSP oligosaccharides extracted from cell walls of *L. cremoris* 3107 and TP901-1-resistant mutant E126. * indicates non-saccharidic compounds. (B) Monosaccharide composition of purified rhamnan peaks relative to glucosamine ($GlcNH_2$ = 1) from cell walls of *L. cremoris* 3107 and its derivative E126 from a representative experiment. (C) Monosaccharide composition of purified PSP peaks relative to glucosamine ($GlcNH_2$ = 1) from cell walls of *L. cremoris* 3107 and its derivative E126 from a representative experiment.

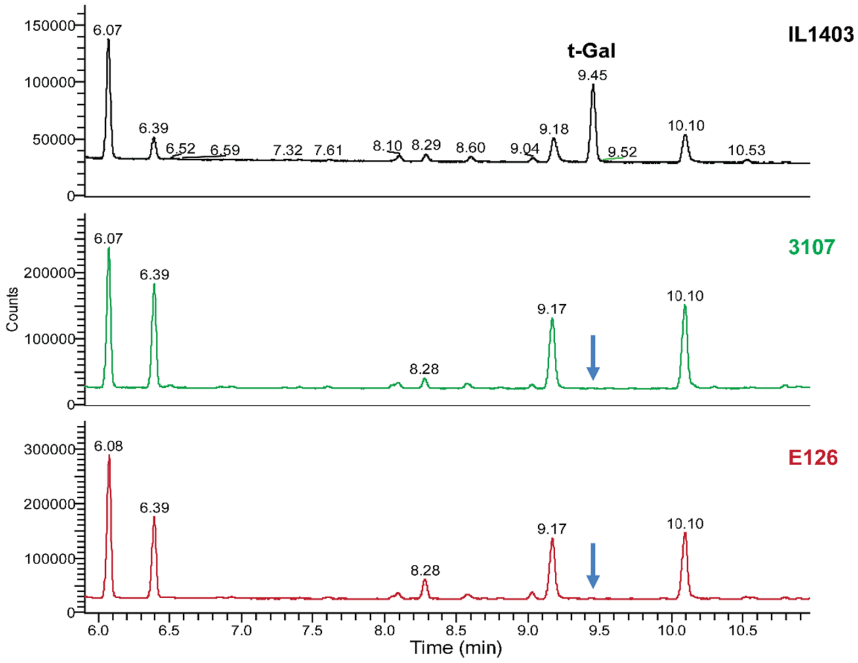

FIGURE 4 Gas chromatography profiles corresponding to methylation analysis of LTA preparations of *L. lactis* IL1403 (as a control), *L. cremoris* 3107 and its mutant E126 following phenol extraction. Presence of terminal galactose shown with "t-Gal" and absence of t-Gal shown with a blue arrow. The figures were zoomed onto the region corresponding to hexoses.

DISCUSSION

While the initial and reversible interaction between the members of different lactococcal phage groups and their hosts has been extensively characterized (Ainsworth et al., 2014; Dupont et al., 2004; Mahony et al., 2015; Marcelli et al., 2019), the molecular components and/or events that trigger phage DNA release and thus irreversible commitment to infection remain obscure in *Lactococcus*, a knowledge gap that exists for the vast majority of Gram-positive infecting phages.

It has previously been proposed that, following the initial attachment of TP901-1 and LC3 to their shared receptor, the PSP component of the CWPS of *L. cremoris* 3107 (Ainsworth et al., 2014; Østergaard Breum et al., 2007), employ different DNA release pathways (Mahony et al., 2017; Østergaard Breum et al., 2007). Indeed, in the latter study, it was shown that both phages are able to adsorb to three TP901-1-resistant mutants of *L. cremoris* 3107 but only LC3 is capable to infect these mutant strains. In the present work, we have genetically and phenotypically complemented these TP901-1-resistant mutants. We demonstrate that their resistance to TP901-1 is caused by mutations in two genes, predicted to encode membrane-associated GTs, and positioned at unconnected locations on the *L. cremoris* 3107 genome. The topology and functional prediction of each gene product indicates that both proteins are part of a novel lactococcal TGS (Figure 5). This is supported by the fact that $CsdC_{3107}$ can be replaced by other GTs, which apparently catalyse the same reaction (one of them exhibiting only 73% of AA identity) and that $CsdG_{3107}$ can be substituted by $YieH_{IL1403}$. Since TGS components have not been described to form protein complexes to date, we presume that a glycosylated moiety directly or indirectly constitutes the DNA release trigger, although we cannot exclude that both GTs constitute a complex that may act as a secondary receptor. In addition, if both GTs were forming a complex, the overproduction of each GT in the corresponding mutant and 3107 would alter the stoichiometry of such complexes and, consequently, have an impact on TP901-1 infection. However, we found that the values of different phage assays performed with these strains were similar to the values obtained with the parent strain.

$CsdC_{3107}$ is a homologue of $CsdC_{NZ9000}$ (93% identity) (Figure S2), the first component of a TGS from *L. lactis* NZ9000 involved in rhamnan glucosylation. $CsdC_{3107}$, therefore, is believed to produce Und-P-Glc at the inner side of the cytoplasmic membrane (Theodorou et al., 2020) (Figure 5). This is supported by the complementation of the derivative mutant E121 with the $csdA_{NZ9000}$ and $csdC_{NZ9000}$ genes, both of which have been described to encode functionally equivalent enzymes (Theodorou et al., 2020). Additionally, we have identified a third GT-encoding gene in *L. cremoris* NZ9000 that complements the mutant E121, whose product, $CsdH_{NZ9000}$, is presumed to synthesise the same glucosylated lipid intermediate (Und-P-Glc). $CsdH_{NZ9000}$ is therefore expected to contribute to the functional redundancy among different TGS systems in NZ9000 (Theodorou et al., 2020). By contrast, based on comparative genome analysis, *L. cremoris* 3107 appears to encode just a single functional enzyme synthesising Und-P-Glc, as it lacks a homologue of $csdA_{NZ9000}$, while its homologue of $csdH_{NZ9000}$, the pseudogene associated with locus tag *L3107_0078*, is predicted to render a truncated protein due to a transposon insertion. This is in agreement with the TP901-1-resistant phenotype

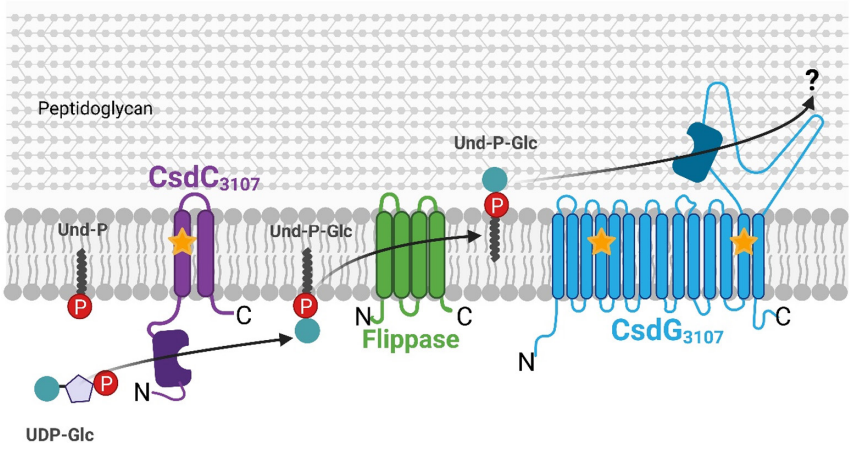

FIGURE 5 Schematic representation of *L. cremoris* 3107 TGS required for TP901-1 DNA release. $CsdC_{3107}$, synthesises Und-P-Glc in the cytoplasmic side of the cell membrane using UDP-Glc as a donor. The lipid intermediate, Und-P-Glc, is transferred across the membrane by a flippase, presumably encoded by *L3107_0554*. Finally, $CsdG_{3107}$ transfers the Glc to a final acceptor, presumably a carbohydrate moiety, to form a saccharidic molecule that can trigger TP901-1 DNA release. The stars indicate the pre-mature stop codon locations within the TMHs in the corresponding products of mutants E119, E121 and E126. E121 renders a truncated $CsdC_{3107}$ of 143 AA, while E119 and E126 produce a truncated $CsdG_{3107}$ of 463 and 161 AA, respectively. Note that the long extracellular loop of $CsdG_{3107}$ between TMHs 13th and 14th includes residues 466 to 859. Created with BioRender.com.

observed in the mutant E121 as a consequence of the $csdC_{3107}$ mutation. However, though unlikely, we cannot exclude that the intermediate generated by $CsdC_{3107}$ in *L. cremoris* 3107 is used by other GTs rather than or in addition to $CsdG_{3107}$.

We hypothesise that the subsequent step of Und-P-Glc transfer from the inner side to the outer side of the membrane of 3107 (Figure 5), is likely accomplished by the deduced product of *L3107_0554*. It exhibits 100% identity with the flippase, CflA, from *L. cremoris* NZ9000, whose activity is a common part of its TGSs (Theodorou et al., 2020). Following Und-P-Glc transfer, $CsdG_{3107}$ is presumed to catalyse the extracellular transfer of Glc to the final acceptor (Figure 5). Unfortunately, despite structural analyses of the CWPS and LTA of *L. cremoris* 3107 and its $csdG_{3107}$ *or* $csdC_{3107}$ mutant derivatives, the cell envelope component glucosylated by $CsdG_{3107}$ could not be identified. Based on the final acceptors described to date in Gram-positive bacteria (Rismondo et al., 2021), this moiety is presumed to be a carbohydrate.

Interestingly, homologues of $csdG_{3107}$ are found in *L. lactis* and *L. cremoris* strains representing all currently known CWPS types (A-D) (Mahony et al., 2020). Given the high similarity observed among $CsdG_{3107}$ in lactococcal strains (Figure S3) and the diversity of CWPS structures present on them (Martínez et al., 2020), it is reasonable to suggest that the final acceptor is not part of the CWPS but rather another cell wall structure. Additionally, we presume that $csdC_{3107}$, performing the first step of the glycosylation process, is not always essential for $csdG_{3107}$ function, since other Und-P-Glc synthesising GTs encoded by other lactococcal strains, for example, $CsdH_{NZ9000}$ or $CsdA_{NZ9000}$ in NZ9000 (which harbours a homologue of $csdG_{3107}$), may be performing this first step. However, bioinformatic analysis of all the predicted GTs of *L. cremoris* 3107 did not (with the exception of the non-functional $CsdE_{3107}$) reveal any other candidate with the topological characteristics of the first component of a TGS.

To the best of our knowledge, cell envelope-associated carbohydrates have not been implicated in the DNA release step of a Gram-positive phage to date. Previous studies have demonstrated that the siphophage SPP1 recognises a carbohydrate moiety on the cell surface of *B. subtilis*, followed by irreversible binding to the ectodomain of the membrane protein YueB through its tail fibre (São-José et al., 2004; Vinga et al., 2012), triggering its DNA release (São-José et al., 2006). In a similar manner, it has been shown that lactococcal Ceduoviruses, irreversibly bind either to protein PIP (Monteville et al., 1994; Valyasevi et al., 1991) or YjaE (Millen & Romero, 2016; Stuer-Lauridsen et al., 2003). It is also known that the cell wall of the lactococcal host of phage sk1 causes its DNA ejection, but it seems that neither a host membrane protein nor LTA is required for that purpose (Geller et al., 2005). *Enterococcus faecalis* encodes a protein that exhibits high similarity to the lactococcal PIP protein, named as PIP_{EF}. It has been shown that this membrane protein is dispensable for initial phage attachment, yet is implicated in DNA entry (Duerkop et al., 2016).

In contrast to the situation in Gram-positive phages, a cell envelope glycopolymer typical of Gram-negative bacteria, i.e. the lipopolysaccharide (LPS), is implicated in DNA release for various phages. For instance, *in vitro* DNA ejection of *S. typhimurium* phages P22, 9NA and Det7; and *E. coli* HK620 has been observed after incubation with their respective host LPS (Andres et al., 2010, 2012; Broeker et al., 2018, 2019). LPS from an *E. coli* rough strain (a bacterial strain containing only the lipid A and the core oligosaccharide region of the

LPS (Raetz & Whitfield, 2002)) also causes *in vitro* DNA release by phage T7. It has been suggested that interaction of the phage with this glycopolymer occurs through a heptose sugar present on the LPS chain (González-García et al., 2015; Qimron et al., 2006). Recently, it has been reported that an *E. coli* phage, PNJ1809-36, irreversibly binds to the penultimate galactose of LPS (Gong et al., 2021). In addition, it has been shown that DNA release by phage X174, which can infect rough mutants of *Enterobacteriaceae*, is triggered by LPS isolated from an X174-susceptible strain (Sun et al., 2017).

In summary, by comparative genome analysis, complementation experiments and various phage assays we identified two distinct genes of *L. cremoris* 3107 that are essential for the DNA release of TP901-1. The coordinated activity of their predicted products is presumed to be involved in the glucosylation of a still elusive cell envelope-associated component required for TP901-1 infection.

AUTHOR CONTRIBUTIONS

K.J.H., F.K.V., J.M. and D.v.S. involved in conceptualization; P.K. and F.B. involved in data curation; S.R-C., A.E.G., S.Ø.B., S.P., P.C., E.V. and I.S. involved in investigation; S.R-C. and A.E.G. involved in formal analysis; S.R-C., A.E.G., F.B., J.M. and D.v.S. involved in validation; K.J.H, F.K.V., M-P.C-C., E.V. and I.S. involved in resources; S.R-C. and A.E.G. involved in writing—original draft; S.R-C., A.E.G, P.K, F.B., S. Ø.B., H.N., K.J.H., F.K.V, S.P., P.C., M-P.C-C., E.V., I.S., J.M and D.v.S. involved in writing—reviewing and editing; J.M. and D.v.S. involved in funding acquisition; J.M. and D.v.S. involved in supervision.

ACKNOWLEDGEMENTS

This publication has emanated from research conducted with the financial support of Science Foundation Ireland (https://www.sfi.ie/) under Grant numbers SFI/12/RC/2273-P1 (DvS), SFI/12/RC/2273-P2 (DvS) and 20/FFP-P/8664 (JM). For the purpose of Open Access, the author has applied a CC BY public copyright license to any Author Accepted Manuscript version arising from this submission. The funders had no role in study design, data collection and interpretation, or the decision to submit the work for publication. Open access funding provided by IReL

FUNDING INFORMATION

This publication has emanated from research conducted with the financial support of Science Foundation Ireland (https://www.sfi.ie/) under Grant numbers SFI/12/RC/2273-P1 (DvS), SFI/12/RC/2273-P2 (DvS) and 20/FFP-P/8664 (JM).

CONFLICT OF INTEREST

The authors have declared that no competing interests exist.

DATA AVAILABILITY STATEMENT

All relevant data are within the manuscript and its Supporting Information files. The Illumina raw reads of *L. cremoris* 3107 mutants were deposited in SRA repository under BioProjects no. PRJNA741884 for E119, PRJNA742526 for E121 and PRJNA742657 for E126.

ORCID

Sofía Ruiz-Cruz https://orcid.org/0000-0001-8968-5701
Jennifer Mahony https://orcid.org/0000-0001-5846-6303
Douwe van Sinderen https://orcid.org/0000-0003-1823-7957

REFERENCES

Ainsworth, S., Sadovskaya, I., Vinogradov, E., Courtin, P., Guerardel, Y., Mahony, J. et al. (2014) Differences in lactococcal cell wall polysaccharide structure are major determining factors in bacteriophage sensitivity. *MBio*, 5, e00880.

Altschul, S.F., Gish, W., Miller, W., Myers, E.W. & Lipman, D.J. (1990) Basic local alignment search tool. *Journal of Molecular Biology*, 215, 403–410.

Andres, D., Hanke, C., Baxa, U., Seul, A., Barbirz, S. & Seckler, R. (2010) Tailspike interactions with lipopolysaccharide effect DNA ejection from phage P22 particles *in vitro*. *The Journal of Biological Chemistry*, 285, 36768–36775.

Andres, D., Roske, Y., Doering, C., Heinemann, U., Seckler, R. & Barbirz, S. (2012) Tail morphology controls DNA release in two *Salmonella* phages with one lipopolysaccharide receptor recognition system. *Molecular Microbiology*, 83, 1244–1253.

Blatny, J.M., Godager, L., Lunde, M. & Nes, I.F. (2004) Complete genome sequence of the *Lactococcus lactis* temperate phage φLC3: comparative analysis of φLC3 and its relatives in lactococci and streptococci. *Virology*, 318, 231–244.

Broadbent, S.E., Davies, M.R. & Van Der Woude, M.W. (2010) Phase variation controls expression of *Salmonella* lipopolysaccharide modification genes by a DNA methylation-dependent mechanism. *Molecular Microbiology*, 77, 337–353.

Broeker, N.K., Kiele, F., Casjens, S.R., Gilcrease, E.B., Thalhammer, A., Koetz, J. et al. (2018) *In vitro* studies of lipopolysaccharide-mediated DNA release of podovirus HK620. *Viruses*, 10(6), 289.

Broeker, N.K., Roske, Y., Valleriani, A., Stephan, M.S., Andres, D., Koetz, J. et al. (2019) Time-resolved DNA release from an O-antigen–specific *Salmonella* bacteriophage with a contractile tail. *The Journal of Biological Chemistry*, 294, 11751–11761.

Brøndsted, L., Østergaard, S., Pedersen, M., Hammer, K. & Vogensen, F.K. (2001) Analysis of the complete DNA sequence of the temperate bacteriophage TP901-1: evolution, structure, and genome organization of lactococcal bacteriophages. *Virology*, 283, 93–109.

Chapot-Chartier, M.-P., Vinogradov, E., Sadovskaya, I., Andre, G., Mistou, M.-Y., Trieu-Cuot, P. et al. (2010) Cell surface of *Lactococcus lactis* is covered by a protective polysaccharide pellicle. *The Journal of Biological Chemistry*, 285, 10464–10471.

Davies, M.R., Broadbent, S.E., Harris, S.R., Thomson, N.R. & van der Woude, M.W. (2013) Horizontally acquired glycosyltransferase operons drive Salmonellae lipopolysaccharide diversity. *PLoS Genetics*, 9, e1003568.

Derkx, P.M.F., Janzen, T., Sørensen, K.I., Christensen, J.E., Stuer-Lauridsen, B. & Johansen, E. (2014) The art of strain improvement of industrial lactic acid bacteria without the use of recombinant DNA technology. *Microbial Cell Factories*, 13, S5.

Deveau, H., Labrie, S.J., Chopin, M.C. & Moineau, S. (2006) Biodiversity and classification of lactococcal phages. *Applied and Environmental Microbiology*, 72, 4338–4346.

Dowah, A.S.A. & Clokie, M.R.J. (2018) Review of the nature, diversity and structure of bacteriophage receptor binding proteins that target Gram-positive bacteria. *Biophysical Reviews*, 10, 535–542.

Duerkop, B.A., Huo, W., Bhardwaj, P., Palmer, K.L. & Hooper, L.V. (2016) Molecular basis for lytic bacteriophage resistance in enterococci. *MBio*, 7, e01304–e01316.

Dupont, K., Janzen, T., Vogensen, F.K., Josephsen, J. & Stuer-Lauridsen, B. (2004) Identification of *Lactococcus lactis* genes required for bacteriophage adsorption. *Applied and Environmental Microbiology*, 70, 5825–5832.

Erazo Garzon, A., Mahony, J., Bottacini, F., Kelleher, P. & van Sinderen, D. (2019) Complete genome sequence of *Lactococcus lactis* subsp. *cremoris* 3107, host for the model lactococcal P335 bacteriophage TP901-1. *Microbiology Resource Announcements*, 8, e01635-18.

Farenc, C., Spinelli, S., Vinogradov, E., Tremblay, D., Blangy, S., Sadovskaya, I. et al. (2014) Molecular insights on the recognition of a *Lactococcus lactis* cell wall pellicle by the phage 1358 receptor binding protein. *Journal of Virology*, 88, 7005–7015.

Fernandes, S., Labarde, A., Baptista, C., Jakutytè, L., Tavares, P. & São-José, C. (2016) A non-invasive method for studying viral DNA delivery to bacteria reveals key requirements for phage SPP1 DNA entry in *Bacillus subtilis* cells. *Virology*, 495, 79–91.

Geller, B.L., Ngo, H.T., Mooney, D.T., Su, P. & Dunn, N. (2005) Lactococcal 936-species phage attachment to surface of *Lactococcus lactis*. *Journal of Dairy Science*, 88, 900–907.

Gong, Q., Wang, X., Huang, H., Sun, Y., Qian, X., Xue, F. et al. (2021) Novel host recognition mechanism of the K1 capsule-specific phage of *Escherichia coli*: capsular polysaccharide as the first receptor and lipopolysaccharide as the secondary receptor. *Journal of Virology*, 95, e0092021.

González-García, V.A., Pulido-Cid, M., Garcia-Doval, C., Bocanegra, R., van Raaij, M.J., Martín-Benito, J. et al. (2015) Conformational changes leading to T7 DNA delivery upon interaction with the bacterial receptor. *The Journal of Biological Chemistry*, 290, 10038–10044.

Huan, P.T., Bastin, D.A., Whittle, B.L., Lindberg, A.A. & Verma, N.K. (1997) Molecular characterization of the genes involved in O-antigen modification, attachment, integration and excision in *Shigella flexneri* bacteriophage SfV. *Gene*, 195, 217–227.

Kim, M. & Ryu, S. (2012) Spontaneous and transient defence against bacteriophage by phase-variable glucosylation of O-antigen in *Salmonella enterica* serovar Typhimurium. *Molecular Microbiology*, 86, 411–425.

Koch, B., Christiansen, B., Evison, T., Vogensen, F.K. & Hammer, K. (1997) Construction of specific erythromycin resistance mutations in the temperate lactococcal bacteriophage TP901-1 and their use in studies of phage biology. *Applied and Environmental Microbiology*, 63, 2439–2441.

Kramer, N.E., Hasper, H.E., van den Bogaard, P.T.C., Morath, S., de Kruijff, B., Hartung, T. et al. (2008) Increased D-alanylation of lipoteichoic acid and a thickened septum are main determinants in the nisin resistance mechanism of *Lactococcus lactis*. *Microbiology*, 154, 1755–1762.

Lairson, L.L., Henrissat, B., Davies, G.J. & Withers, S.G. (2008) Glycosyltransferases: structures, functions, and mechanisms. *Annual Review of Biochemistry*, 77, 521–555.

Landete, J.M., Arqués, J.L., Peirotén, Á., Langa, S. & Medina, M. (2014) An improved method for the electrotransformation of lactic acid bacteria: a comparative survey. *Journal of Microbiological Methods*, 105, 130–133.

Langmead, B., Trapnell, C., Pop, M. & Salzberg, S.L. (2009) Ultrafast and memory-efficient alignment of short DNA sequences to the human genome. *Genome Biology*, 10, R25.

Lavelle, K., van Sinderen, D. & Mahony, J. (2021) Cell wall polysaccharides of Gram positive ovococcoid bacteria and their role as bacteriophage receptors. *Computational and Structural Biotechnology Journal*, 19, 4018–4031.

Li, H., Handsaker, B., Wysoker, A., Fennell, T., Ruan, J., Homer, N. et al. (2009) The sequence alignment/map format and SAMtools. *Bioinformatics*, 25, 2078–2079.

Li, T.T., Tian, W.L. & Gu, C.T. (2021) Elevation of *Lactococcus lactis* subsp. *cremoris* to the species level as *Lactococcus cremoris* sp. nov. and transfer of *Lactococcus lactis* subsp. *tructae* to *Lactococcus cremoris* as *Lactococcus cremoris* subsp. *tructae* comb. nov. *The International Journal of Systematic and Evolutionary Microbiology*, 71, 004727.

Lillehaug, D. (1997) An improved plaque assay for poor plaque-producing temperate lactococcal bacteriophages. *Journal of Applied Microbiology*, 83, 85–90.

Liu, J. & Mushegian, A. (2003) Three monophyletic superfamilies account for the majority of the known glycosyltransferases. *Protein Science*, 12, 1418–1431.

Livak, K.J. & Schmittgen, T.D. (2001) Analysis of relative gene expression data using real-time quantitative PCR and the $2^{-\Delta\Delta CT}$ method. *Methods*, 25, 402–408.

Mahony, J., Frantzen, C., Vinogradov, E., Sadovskaya, I., Theodorou, I., Kelleher, P. et al. (2020) The CWPS Rubik's cube: linking diversity of cell wall polysaccharide structures with the encoded biosynthetic machinery of selected *Lactococcus lactis* strains. *Molecular Microbiology*, 114, 582–596.

Mahony, J., Kot, W., Murphy, J., Ainsworth, S., Neve, H., Hansen, L.H. et al. (2013) Investigation of the relationship between lactococcal host cell wall polysaccharide genotype and 936 phage receptor binding protein phylogeny. *Applied and Environmental Microbiology*, 79, 4385–4392.

Mahony, J., Oliveira, J., Collins, B., Hanemaaijer, L., Lugli, G.A., Neve, H. et al. (2017) Genetic and functional characterisation of the lactococcal P335 phage-host interactions. *BMC Genomics*, 18, 146.

Mahony, J., Randazzo, W., Neve, H., Settanni, L. & van Sinderen, D. (2015) Lactococcal 949 group phages recognize a carbohydrate receptor on the host cell surface. *Applied and Environmental Microbiology*, 81, 3299–3305.

Mann, E. & Whitfield, C. (2016) A widespread three-component mechanism for the periplasmic modification of bacterial glycoconjugates. *Canadian Journal of Chemistry*, 94, 883–893.

Marcelli, B., de Jong, A., Karsens, H., Janzen, T., Kok, J. & Kuipers, O.P. (2019) A specific sugar moiety in the *Lactococcus lactis* cell wall pellicle is required for infection by CHPC971, a member of the rare 1706 phage species. *Applied and Environmental Microbiology*, 85, e01224-19.

Martínez, B., Rodríguez, A., Kulakauskas, S. & Chapot-Chartier, M.P. (2020) Cell wall homeostasis in lactic acid bacteria: threats and defences. *FEMS Microbiology Reviews*, 44, 538–564.

Mavris, M., Manning, P.A. & Morona, R. (1997) Mechanism of bacteriophage SfII-mediated serotype conversion in *Shigella flexneri*. *Molecular Microbiology*, 26, 939–950.

Millen, A.M. & Romero, D.A. (2016) Genetic determinants of lactococcal *C2viruses* for host infection and their role in phage evolution. *The Journal of General Virology*, 97, 1998–2007.

Mistou, M.Y., Sutcliffe, I.C. & van Sorge, N.M. (2016) Bacterial glycobiology: rhamnose-containing cell wall polysaccharides in Gram-positive bacteria. *FEMS Microbiology Reviews*, 40, 464–479.

Monteville, M.R., Ardestani, B. & Geller, B.L. (1994) Lactococcal bacteriophages require a host cell wall carbohydrate and a plasma membrane protein for adsorption and ejection of DNA. *Applied and Environmental Microbiology*, 60, 3204–3211.

Østergaard Breum, S., Neve, H., Heller, K.J. & Vogensen, F.K. (2007) Temperate phages TP901-1 and φLC3, belonging to the P335 species, apparently use different pathways for DNA

injection in *Lactococcus lactis* subsp. *cremoris* 3107. *FEMS Microbiology Letters*, 276, 156–164.

Østergaard, S., Brøndsted, L. & Vogensen, F.K. (2001) Identification of a replication protein and repeats essential for DNA replication of the temperate lactococcal bacteriophage TP901-1. *Applied and Environmental Microbiology*, 67, 774–781.

Qimron, U., Marintcheva, B., Tabor, S. & Richardson, C.C. (2006) Genomewide screens for *Escherichia coli* genes affecting growth of T7 bacteriophage. *Proceedings of the National Academy of Sciences of the United States of America*, 103, 19039–19044.

Raetz, C.R.H. & Whitfield, C. (2002) Lipopolysaccharide endotoxins. *Annual Review of Biochemistry*, 71, 635–700.

Rismondo, J., Gillis, A. & Gründling, A. (2021) Modifications of cell wall polymers in Gram-positive bacteria by multi-component transmembrane glycosylation systems. *Current Opinion in Microbiology*, 60, 24–33.

Rutherford, K., Parkhill, J., Crook, J., Horsnell, T., Rice, P., Rajandream, M.A. et al. (2000) Artemis: sequence visualization and annotation. *Bioinformatics*, 16, 944–945.

Sadovskaya, I., Vinogradov, E., Courtin, P., Armalyte, J., Meyrand, M., Giaouris, E. et al. (2017) Another brick in the wall: a rhamnan polysaccharide trapped inside peptidoglycan of *Lactococcus lactis*. *MBio*, 8, e01303-17.

Sambrook, J., Fritsch, E.F. & Maniatis, T. (1989) *Molecular cloning: a laboratory manual*. Cold Spring Harbor, NY: Cold Spring Harbor Laboratory Press.

Sambrook, J. & Russell, D.W. (2006) Transformation of *E. coli* by electroporation. *CSH Protocols*, 2006, pdb.prot3933.

São-José, C., Baptista, C. & Santos, M.A. (2004) *Bacillus subtilis* operon encoding a membrane receptor for bacteriophage SPP1. *Journal of Bacteriology*, 186, 8337–8346.

São-José, C., Lhuillier, S., Lurz, R., Melki, R., Lepault, J., Santos, M.A. et al. (2006) The ectodomain of the viral receptor YueB forms a fiber that triggers ejection of bacteriophage SPP1 DNA. *The Journal of Biological Chemistry*, 281, 11464–11470.

Schmittgen, T.D. & Livak, K.J. (2008) Analyzing real-time PCR data by the comparative C_t method. *Nature Protocols*, 3, 1101–1108.

Sega, G.A. (1984) A review of the genetic effects of ethyl methanesulfonate. *Mutation Research*, 134, 113–142.

Sievers, F., Wilm, A., Dineen, D., Gibson, T.J., Karplus, K., Li, W. et al. (2011) Fast, scalable generation of high-quality protein multiple sequence alignments using Clustal omega. *Molecular Systems Biology*, 7, 539.

Sijtsma, L., Wouters, J.T. & Hellingwerf, K.J. (1990) Isolation and characterization of lipoteichoic acid, a cell envelope component involved in preventing phage adsorption, from *Lactococcus lactis* subsp. *cremoris* SK110. *Journal of Bacteriology*, 172, 7126–7130.

Söding, J., Biegert, A. & Lupas, A.N. (2005) The HHpred interactive server for protein homology detection and structure prediction. *Nucleic Acids Research*, 33, W244–W248.

Sonnhammer, E.L., von Heijne, G. & Krogh, A. (1998) A hidden Markov model for predicting transmembrane helices in protein sequences. *Proceedings 16th International Conference on Intelligent Systems for Molecular Biology*, 6, 175–182.

Spears, P.A., Havell, E.A., Hamrick, T.S., Goforth, J.B., Levine, A.L., Abraham, S.T. et al. (2016) *Listeria monocytogenes* wall teichoic acid decoration in virulence and cell-to-cell spread. *Molecular Microbiology*, 101, 714–730.

Stockdale, S.R., Collins, B., Spinelli, S., Douillard, F.P., Mahony, J., Cambillau, C. et al. (2015) Structure and assembly of TP901-1 virion unveiled by mutagenesis. *PLoS One*, 10, e0131676.

Stuer-Lauridsen, B., Janzen, T., Schnabl, J. & Johansen, E. (2003) Identification of the host determinant of two prolate-headed phages infecting *Lactococcus lactis*. *Virology*, 309, 10–17.

Sumrall, E.T., Shen, Y., Keller, A.P., Rismondo, J., Pavlou, M., Eugster, M.R. et al. (2019) Phage resistance at the cost of virulence: *Listeria monocytogenes* serovar 4b requires galactosylated teichoic acids for InlB-mediated invasion. *PLoS Pathogens*, 15, e1008032.

Sun, Y., Roznowski, A.P., Tokuda, J.M., Klose, T., Mauney, A., Pollack, L. et al. (2017) Structural changes of tailless bacteriophage ΦX174 during penetration of bacterial cell walls. *Proceedings of the National Academy of Sciences of the United States of America*, 114, 13708–13713.

Tan, Y.Z., Zhang, L., Rodrigues, J., Zheng, R.B., Giacometti, S.I., Rosário, A.L. et al. (2020) Cryo-EM structures and regulation of arabinofuranosyltransferase AftD from mycobacteria. *Molecular Cell*, 78, 683–699.e11.

Taujale, R., Zhou, Z., Yeung, W., Moremen, K.W., Li, S. & Kannan, N. (2021) Mapping the glycosyltransferase fold landscape using interpretable deep learning. *Nature Communications*, 12, 5656.

Theodorou, I., Courtin, P., Palussière, S., Kulakauskas, S., Bidnenko, E., Péchoux, C. et al. (2019) A dual-chain assembly pathway generates the high structural diversity of cell-wall polysaccharides in *Lactococcus lactis*. *The Journal of Biological Chemistry*, 294(46), 17612–17625.

Theodorou, I., Courtin, P., Sadovskaya, I., Palussière, S., Fenaille, F., Mahony, J. et al. (2020) Three distinct glycosylation pathways are involved in the decoration of *Lactococcus lactis* cell wall glycopolymers. *The Journal of Biological Chemistry*, 295, 5519–5532.

Valyasevi, R., Sandine, W.E. & Geller, B.L. (1991) A membrane protein is required for bacteriophage c2 infection of *Lactococcus lactis* subsp. *lactis* C2. *Journal of Bacteriology*, 173, 6095–6100.

Vegge, C.S., Vogensen, F.K., Mc Grath, S., Neve, H., van Sinderen, D. & Brøndsted, L. (2006) Identification of the lower baseplate protein as the antireceptor of the temperate lactococcal bacteriophages TP901-1 and Tuc2009. *Journal of Bacteriology*, 188, 55–63.

Vinga, I., Baptista, C., Auzat, I., Petipas, I., Lurz, R., Tavares, P. et al. (2012) Role of bacteriophage SPP1 tail spike protein gp21 on host cell receptor binding and trigger of phage DNA ejection. *Molecular Microbiology*, 83, 289–303.

Vinogradov, E., Sadovskaya, I., Courtin, P., Kulakauskas, S., Grard, T., Mahony, J. et al. (2018) Determination of the cell wall polysaccharide and teichoic acid structures from *Lactococcus lactis* IL1403. *Carbohydrate Research*, 462, 39–44.

Vinogradov, E., Sadovskaya, I., Grard, T., Murphy, J., Mahony, J., Chapot-Chartier, M.-P. et al. (2018) Structural studies of the cell wall polysaccharide from *Lactococcus lactis* UC509.9. *Carbohydrate Research*, 461, 25–31.

Waterhouse, A.M., Procter, J.B., Martin, D.M.A., Clamp, M. & Barton, G.J. (2009) Jalview version 2—a multiple sequence alignment editor and analysis workbench. *Bioinformatics*, 25, 1189–1191.

SUPPORTING INFORMATION

Additional supporting information can be found online in the Supporting Information section at the end of this article.

How to cite this article: Ruiz-Cruz, S., Erazo Garzon, A., Kelleher, P., Bottacini, F., Breum, S.Ø. & Neve, H. et al. (2022) Host genetic requirements for DNA release of lactococcal phage TP901-1. *Microbial Biotechnology*, 15, 2875–2889. Available from: https://doi.org/10.1111/1751-7915.14156